LensMechanix®

Tutorial:

Package, analyze, and validate a sample lens system

December 2017

Zemax

www.zemax.com/lmx/
LMxSales@Zemax.com
LMxSupport@Zemax.com

Introduction

In this tutorial, you learn how to package, analyze, and validate a sample lens system in LensMechanix. The sample file you'll use to complete this tutorial is a sequential OpticStudio file, which will demonstrate how LensMechanix converts sequential OpticStudio files into nonsequential files when you load them.

Learning objectives

At the end of this tutorial, you will be able to:

- Load a sequential OpticStudio file in SOLIDWORKS using LensMechanix
- Build mechanical components around optical components
- Add scatter profiles to mechanical components
- Run an analysis on the complete optomechanical system
- Make necessary changes to the mechanical system to meet specified requirements
- Create a ZAR file with optical and mechanical components

Load an OpticStudio file into LensMechanix

1. In SOLIDWORKS 2015 or later, click **File** > **New** > **Assembly**.
2. Ensure that the LensMechanix tab displays in the Command Manager.
   Note: If it does not display, click **Tools** > **Add-Ins** and select the **LensMechanix** check box.
3. On the **LensMechanix** tab, click **Input OpticStudio File** and select **Load OpticStudio File**.

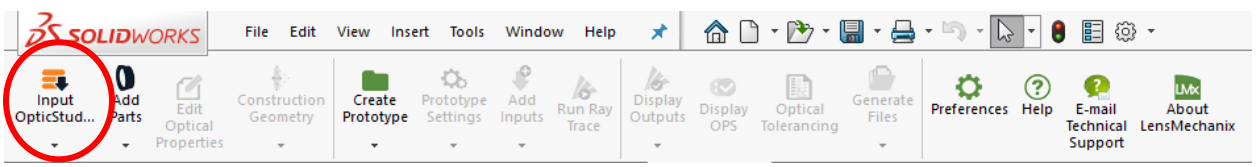

Figure 1. The Load OpticStudio File button in the Command Manager.

4. Click **Browse**, and click **Documents** > **Zemax** > **Samples** > **LensMechanix** > **Single Gauss 25mm Sample** > **25mm Single Gauss SEQ.zmx**.

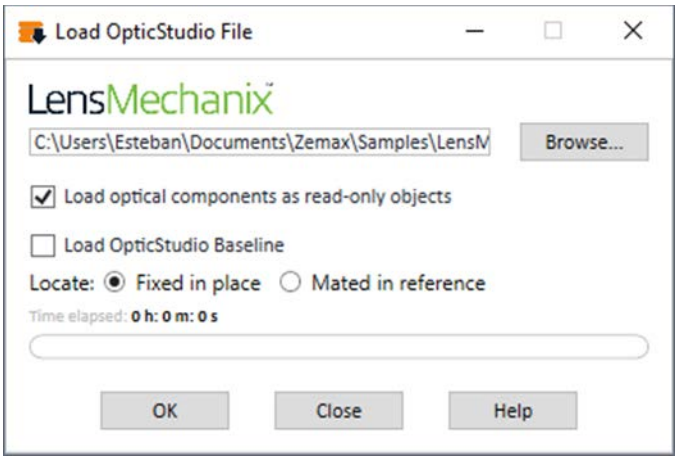

Figure 2. The Load OpticStudio File dialog box.

5. Click **OK** and close the dialog box after the file loads.
   Note: If you clear the **As read-only** check box, you can modify the optical design in SOLIDWORKS. However, it's recommended that you modify the optical design in OpticStudio only. LensMechanix does not have optimization features for optical design.

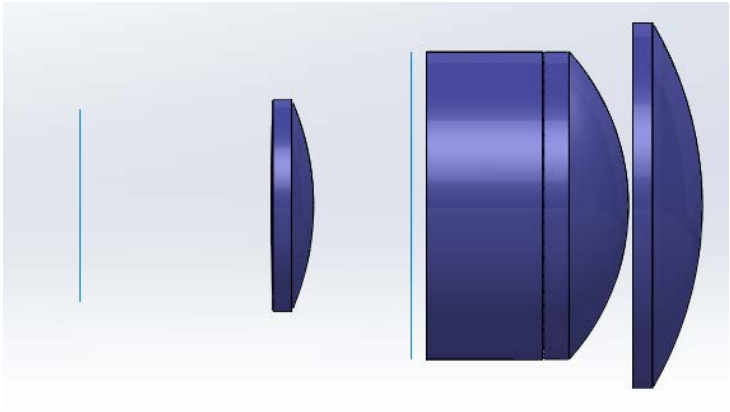

Figure 3. Loaded lens geometries in SOLIDWORKS.

Package an optical system in LensMechanix

1. On the **LensMechanix** tab, click **Construction Geometry** and select **Show All**.
2. On the **Assembly** tab, click **Insert Components** and select **New Part**.

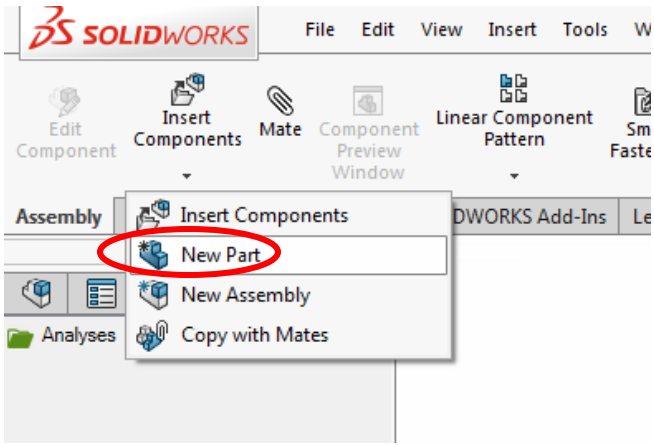

Figure 4. New Part option in SOLIDWORKS.

3. In the Feature Manager, click **Right Plane**.

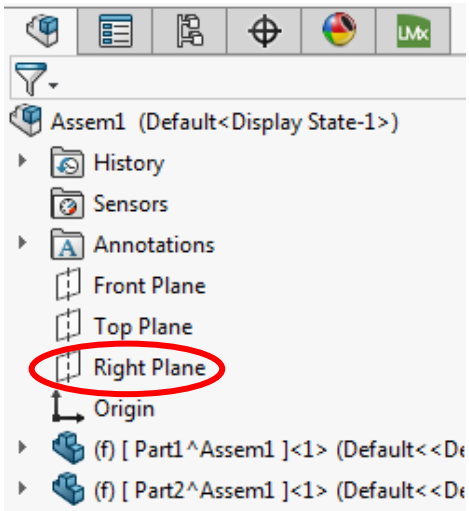

Figure 5. Reference the sketch to the Right Plane.

4. On the **Sketch** tab, create the sketch for the mechanical housing.
   Tip: To completely define your sketch, use the lens geometry and either a centerline, clear aperture, vertex, or origin.
5. On the **Features** tab, click **Revolved Boss/Base**.

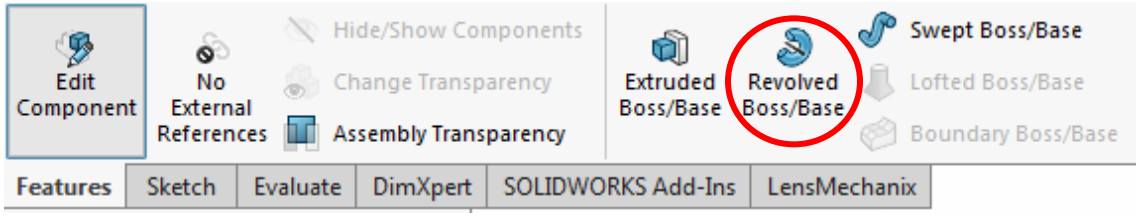

Figure 6. The Revolved Boss/Base feature.

6. Select the centerline as the axis of revolution.
7. Click the green check mark.

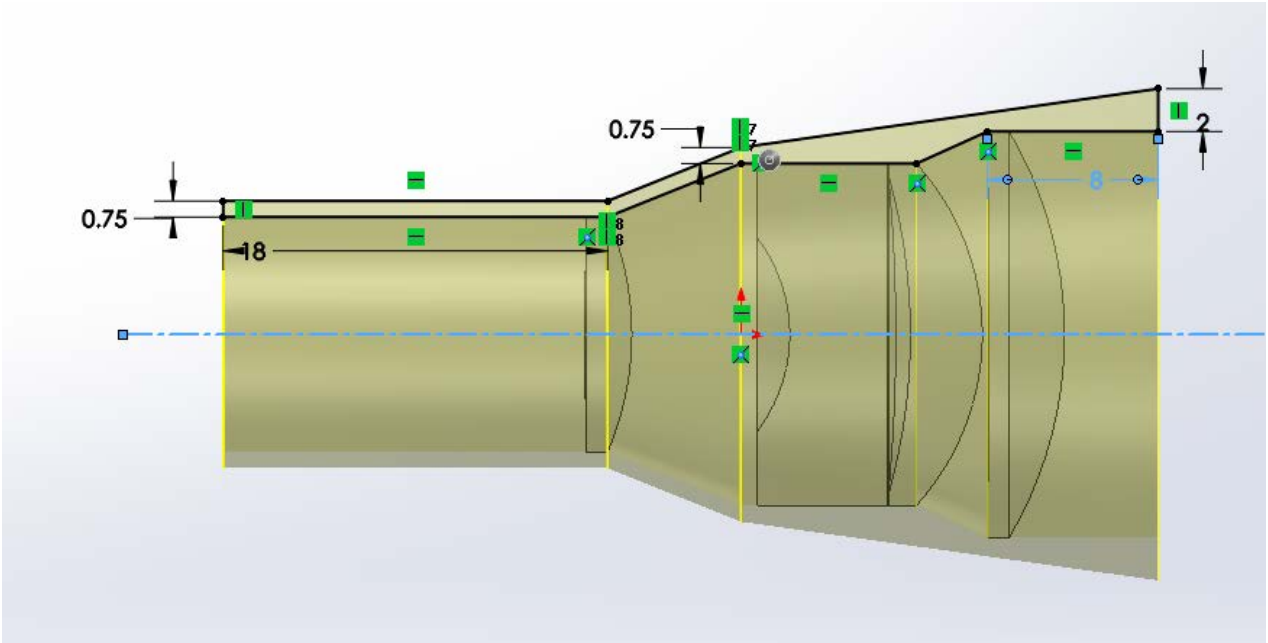

Figure 7. The result of the revolved base with the optical axis as the center of revolution.

8. To exit Edit Part mode, click the icon in the top-right of the graphics area.

Figure 8. The icon in the top-right of the graphics area for returning to assembly.

Analyze your optomechanical system

1. On the **LensMechanix** tab, click **Create Prototype** and select **Create Prototype Wizard**.

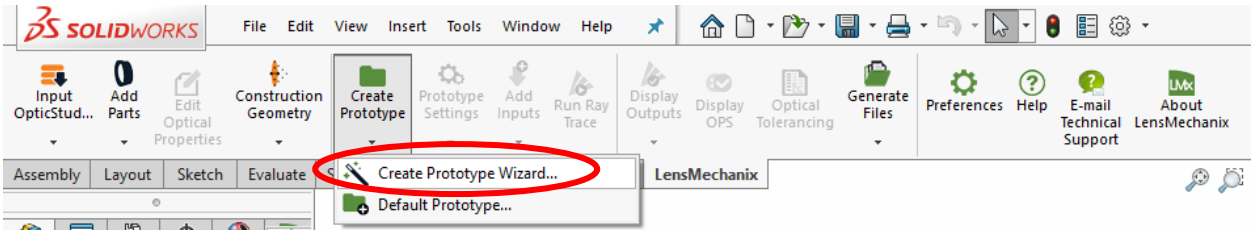

Figure 9. The Create Prototype Wizard option in the Command Manager.

2. In the Analysis name field, type **Ray Trace** and click **Next**.
3. On the Analysis Settings page, set the overfill clear aperture to **10%**, select **Image quality + scattering**, and click **Next**.
4. On the Ambient Conditions page, set the ambient conditions to **25° C** and **1 ATM** and click **Next**.
5. On the Wavelength page, click **Next**.
6. On the Surface Properties page, click **Next**.
7. On the Precision Settings page, set the slider to position **2** and click **Next**.
   Note: A Medium mesh setting corresponds to 100,000 rays and a scatter profile sample R of 5 degrees.
8. On the Allowable Δ page, add the following values:
   - Spot size: **1.5 μm**
   - Beam clipping: **1%**
   - Image contamination: **0.8%**
9. Click **Next**.
10. Ensure that all components display in the Included Components section in the Computational Domain.
    Tip: If any components are in the Ignored Components section, right-click the mechanical component, click **Add to Computational Domain**, and then click the green check mark.

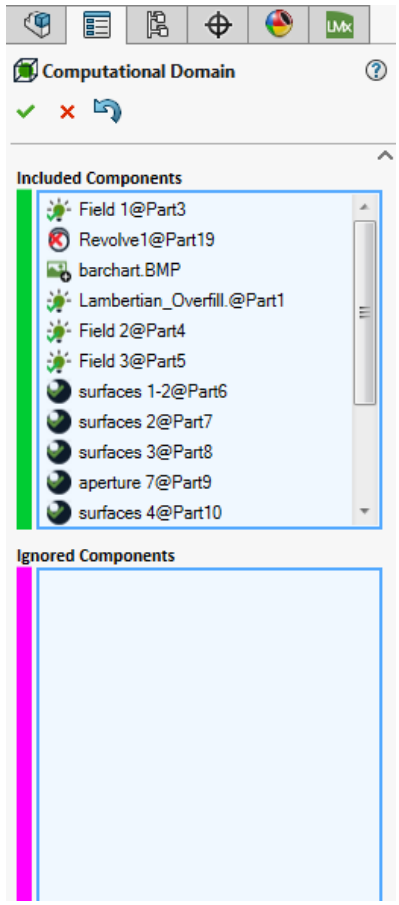

Figure 10. Components are in the Computational Domain.

11. To define a scatter profile for the component, in the Mechanical Components section of the Input Tree, right-click the part that you created and click **Edit Surface Properties**.

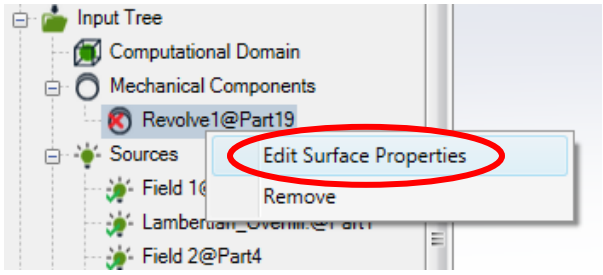

Figure 11. The Edit Surface Properties command for defining a scatter profile.

12. In the Mechanical Component Editor, in the **Scatter Profile** drop-down menu, select **Grey Anodized**, click **Apply to Component**, and then click the green check mark.

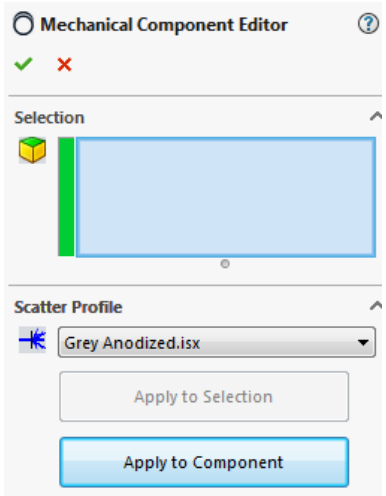

Figure 12. The Scatter Profile drop-down menu in the Mechanical Component Editor.

13. Right-click the mechanical component and select **Change Transparency**.

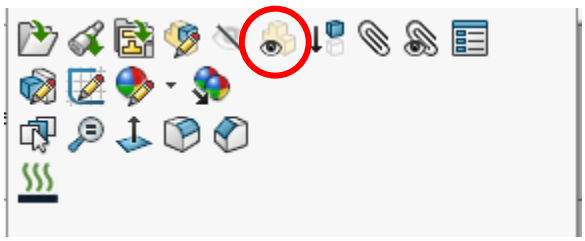

Figure 13. Change Transparency option in the right-click menu.

14. In the Command Manager, click **Add Inputs** and select **Surface Power Input**.

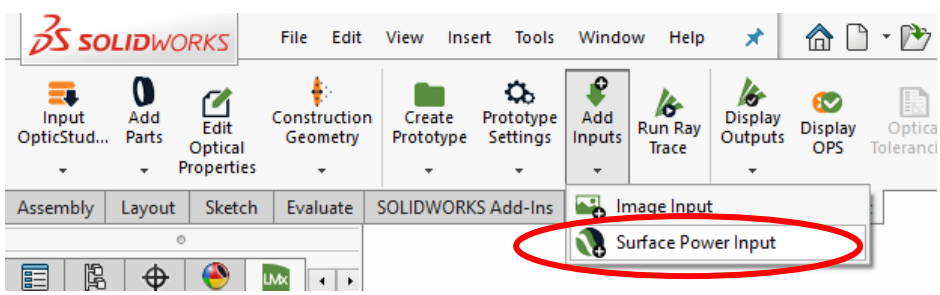

Figure 14. The Surface Power Input in the Command Manager.

15. Select the outermost lens furthest from the color detector.
16. Under **Display**, click **Flux**, select the blue to red color scale, set the resolution to high and then click the green check mark.

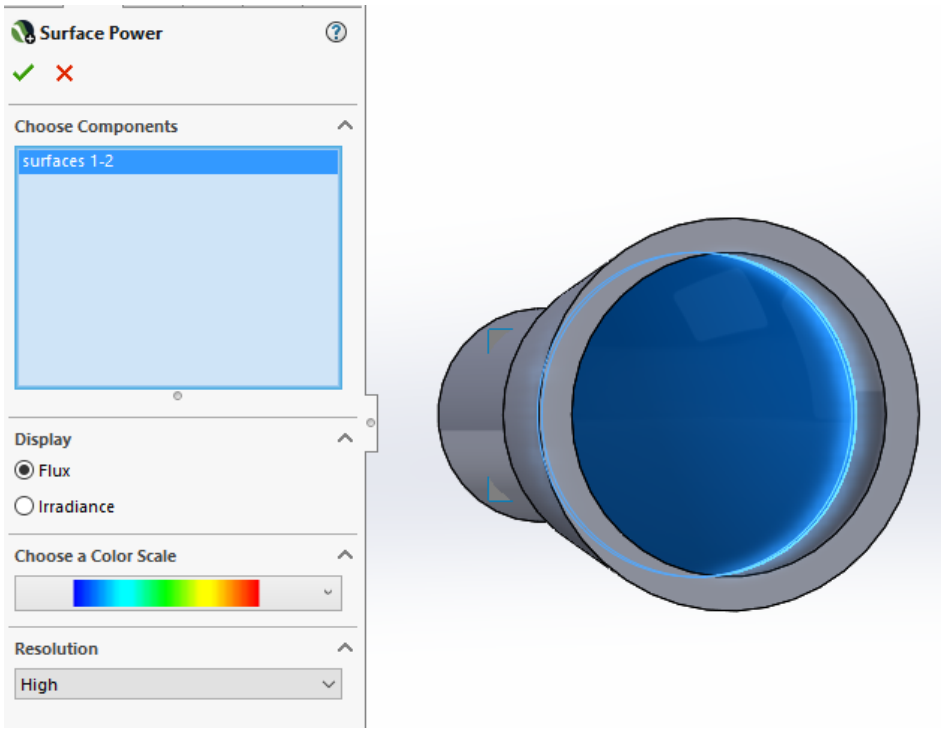

Figure 15. The Surface Power pane with the display irradiance option enabled.

Validate the performance of the complete optomechanical system

1. In the Command Manager, click **Run Ray Trace**.
2. In the Run Ray Trace PMP, select **Baseline ray trace** and **Full ray trace**, and then click **Run**.
   Note: A baseline ray trace considers only optical components in the Computational Domain. A full ray trace calculates the ray trace using both the optical and mechanical components in the Computational Domain.
3. When the ray trace is complete, click the green checkmark.
4. In the Command Manager, click **Display OPS**.
   The status indicators on the Beam clipping and Image contamination tabs appear in red.
5. Select the **Image Contamination** tab.
   The image contamination LensMechanix Output cell changes to red, indicating a variation from the original optical performance that is outside of the defined allowable delta.
6. To see the rays traveling through the system more clearly, click **Display Contaminating Rays**.
7. Enable **Section View** in the graphics area.
8. In the Plane 1 section, select **Right Plane** and click the green check mark.
9. In the Output Tree of the Optics Manager, right-click the automatic ray set generated from the ray trace.
   Note: The remaining image contamination rays follow unintended paths and hit the detectors.

Figures 15 and 16 show the results of the surface power analysis. Notice that some rays are bouncing off the barrel. For this reason, we will make the barrel shorter.

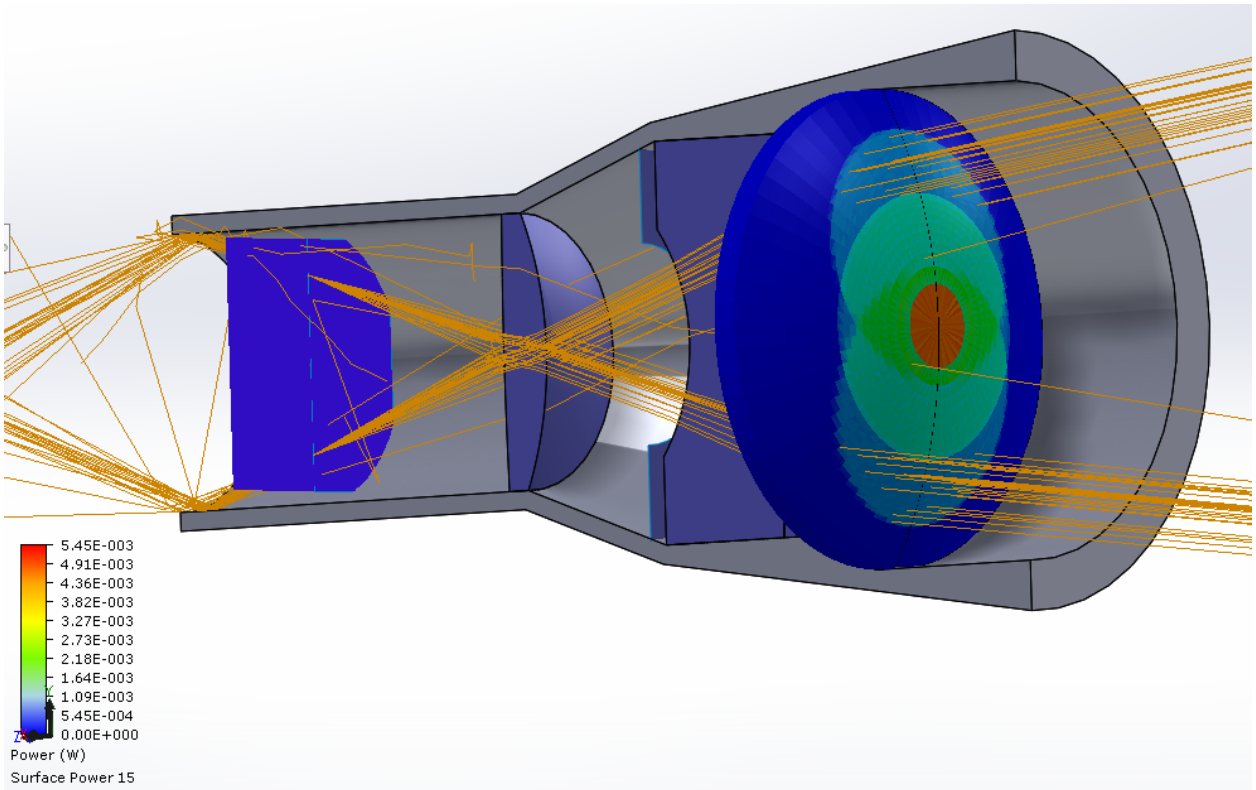

Figure 16. Section view of the optomechanical assembly.

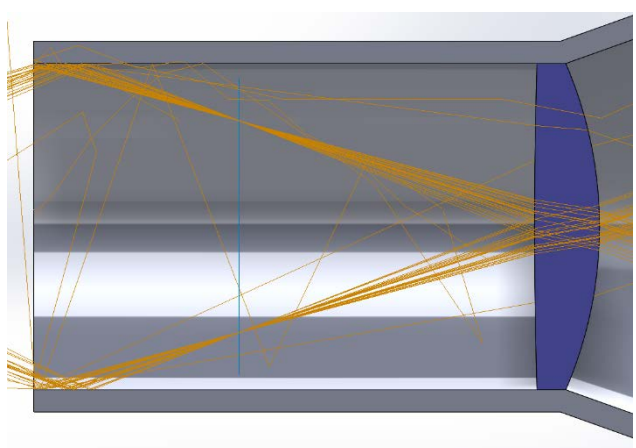

Figure 17. A close-up view of the barrel. Notice that the barrel interferes with the rays.

10. In Feature Manager Design Tree, expand the part that you created, click the sketch, and then click **Edit Sketch**.

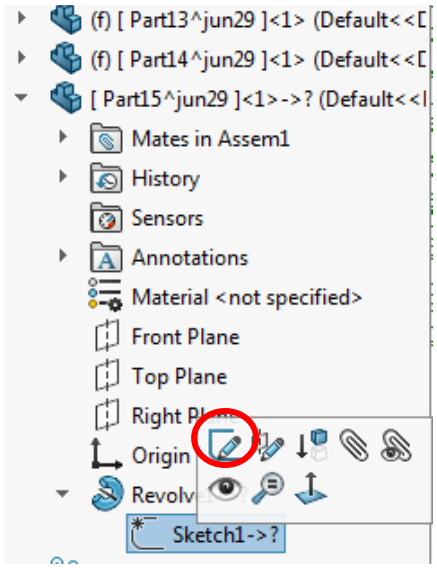

Figure 18. The Edit Sketch icon in the Feature Manager.

11. Shorten the length of the barrel, accept your changes, and then exit Edit Part mode.
12. On the **LensMechanix** tab, click **Create Prototype** and select **Clone Prototype**.
13. In the Prototype name field, type **Ray Trace 2** and click **OK**.
14. In the Command Manager, click **Run Ray Trace**.
15. In the Run Ray Trace PMP, select **Baseline ray trace** and **Full ray trace**, and then click **Run**.
16. In the Command Manager, click **Display OPS**.
17. Notice that the Image contamination row in the OPS is now green, indicating that the geometry change solved the image contamination problem.

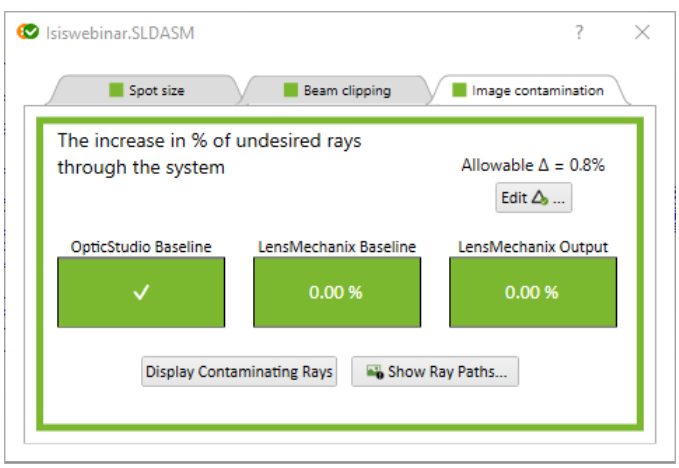

Figure 19. All metric indicators are green, indicating the optomechanical system has met design requirements.

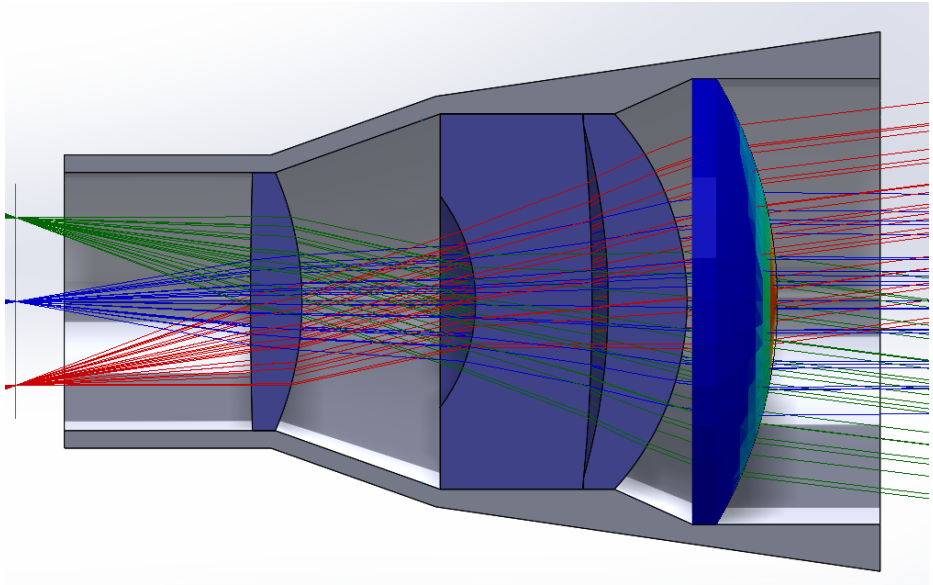

Figure 20. A section view of the optomechanical housing.
Note that the rays are no longer interfering with the mechanical housing.

Congratulations! You have successfully packaged, analyzed, and validated a sample lens system in LensMechanix.