US007190527B2

(12) **United States Patent**
Rostalski et al.

(10) **Patent No.: US 7,190,527 B2**
(45) **Date of Patent: Mar. 13, 2007**

(54) **REFRACTIVE PROJECTION OBJECTIVE**

(75) Inventors: **Hans-Juergen Rostalski**, Berlin (DE); **Karl-Heinz Schuster**, Koenigsbronn (DE); **Russell Hudyma**, San Ramon, CA (US); **Wilhelm Ulrich**, Aalen (DE); **Rolf Freimann**, Aalen (DE)

(73) Assignee: **Carl Zeiss SMT AG**, Oberkochen (DE)

(*) Notice: Subject to any disclaimer, the term of this patent is extended or adjusted under 35 U.S.C. 154(b) by 0 days.

(21) Appl. No.: **10/931,051**

(22) Filed: **Sep. 1, 2004**

(65) **Prior Publication Data**

US 2005/0231813 A1 Oct. 20, 2005

Related U.S. Application Data

(63) Continuation-in-part of application No. PCT/US03/06592, filed on Mar. 3, 2003.

(60) Provisional application No. 60/360,845, filed on Mar. 1, 2002.

(51) **Int. Cl.**
G02B 9/00 (2006.01)
G03B 27/54 (2006.01)

(52) **U.S. Cl.** **359/649**; 359/754; 355/67

(58) **Field of Classification Search** 359/649–651, 359/754; 355/67
See application file for complete search history.

(56) **References Cited**

U.S. PATENT DOCUMENTS

5,636,066 A 6/1997 Takahashi
6,097,537 A 8/2000 Takahashi et al.
6,198,576 B1 3/2001 Matsuyama
6,349,005 B1 2/2002 Schuster et al.
6,538,821 B2 3/2003 Takahashi
6,556,353 B2 4/2003 Omura
6,560,031 B1 5/2003 Shafer et al.
6,606,144 B1 * 8/2003 Omura 355/67
6,700,645 B1 3/2004 Shigematsu
6,791,761 B2 9/2004 Shafer et al.

(Continued)

FOREIGN PATENT DOCUMENTS

DE 198 18 444 A1 10/1998

(Continued)

OTHER PUBLICATIONS

M. Switkes and M. Rothchild, Immersion lithography at 157 nm. J. Vac. Sci. Technol. B. Nov./Dec. 2001, pp. 2353-2356, vol. 19, No. 6.

(Continued)

Primary Examiner—Ricky L. Mack
Assistant Examiner—William Choi
(74) *Attorney, Agent, or Firm*—Sughrue Mion, PLLC

(57) **ABSTRACT**

Refractive projection objective with a numerical aperture greater than 0.7, consisting of a first convexity, a second convexity, and a waist arranged between the two convexities. The first convexity has a maximum diameter denoted by D1, and the second convexity has a maximum diameter denoted by D2, and $0.8<D_1/D_2<1.1$.

57 Claims, 13 Drawing Sheets

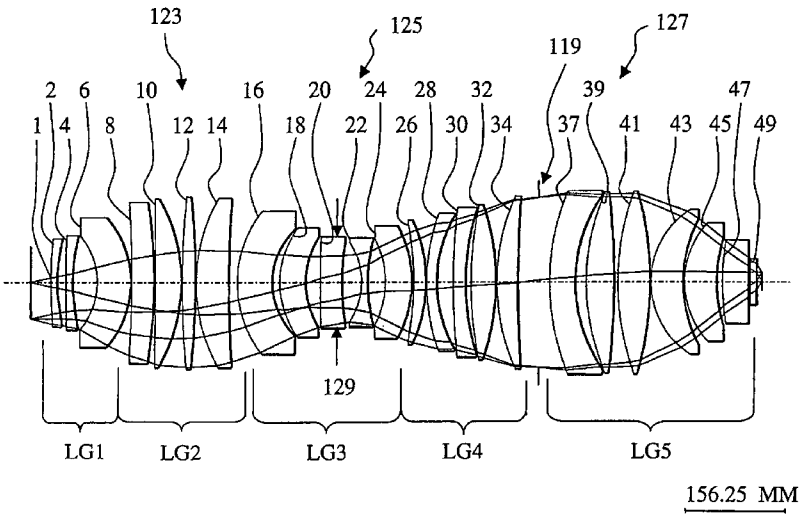

U.S. PATENT DOCUMENTS

2001/0050820	A1	12/2001	Shafer et al.
2002/0001141	A1	1/2002	Shafer et al.
2002/0005938	A1	1/2002	Omura
2002/0197946	A1	12/2002	Emami et al.
2004/0004757	A1	1/2004	Schuster
2004/0120051	A1	6/2004	Schuster et al.
2004/0201899	A1	10/2004	Shafer et al.

FOREIGN PATENT DOCUMENTS

DE	198 55 108	A1	5/2000
DE	102 10 899	A1	9/2003
DE	102 24 361	A1	11/2003
EP	0 816 892	A2	1/1998
EP	1 006 387	A2	6/2000
EP	1 061 396	A2	12/2000
EP	1 111 425	A2	6/2001
EP	1 139 138	A1	10/2001
EP	1 191 378	A1	3/2002
JP	103 25 922	A	12/1998
WO	0 770 895	A2	5/1997
WO	WO 01/04682	A1	1/2001
WO	WO 01/23933	A1	4/2001
WO	WO 01/23935	A1	4/2001
WO	WO 01/50171	A1	7/2001
WO	WO 02/082159	A1	10/2002
WO	WO 02/103431	A1	12/2002
WO	WO 03/036361	A1	5/2003
WO	WO 03/052462	A2	6/2003
WO	WO 03/075097		9/2003
WO	WO 03/077036	A1	9/2003
WO	WO 03/077037	A1	9/2003
WO	WO 03/093904		11/2003
WO	WO 2004/019128	A3	3/2004

OTHER PUBLICATIONS

John H. Bruning, Optical Lithography—Thirty years and three orders of magnitude, SPIE, pp. 14-27, vol. 3049.

Jere D. Buckley and Charles Karatzas, Step and scan: A systems overview of a new lithography tool, SPIE—Optical/Laser Microlithography II, 1989, pp. 424-433, vol. 1088.

Bruce W. Smith, Optics for Photolithography—Optical System Design, Microlithography: Science and Technology, 1998, pp. 263-264.

Walter Wöltche, Optical systems design with reference to the evolution of the double Gauss lens, SPIE-International Lens Design Conference (OSA), 1980, pp. 202-215, vol. 237.

Erhard Glatzel, New Lenses for Microlithography, Zeiss-Inform., 1981/1982, pp. 8-13, vol. 26, No. 92 E, Oberkochen, Germany.

Erhard Glatzel, New Developments in Photographic Objectives, pp. 407-428.

* cited by examiner

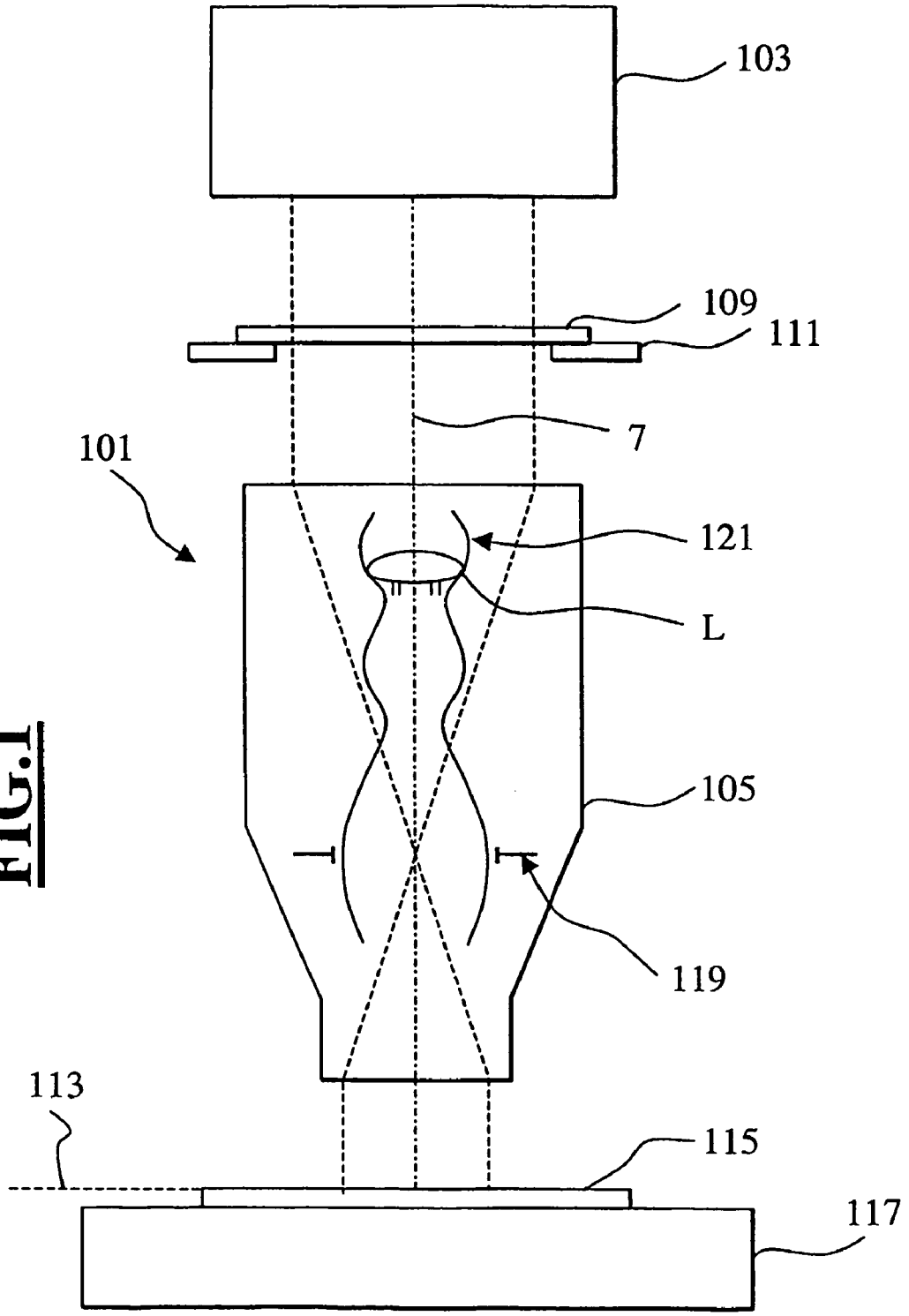

FIG.1

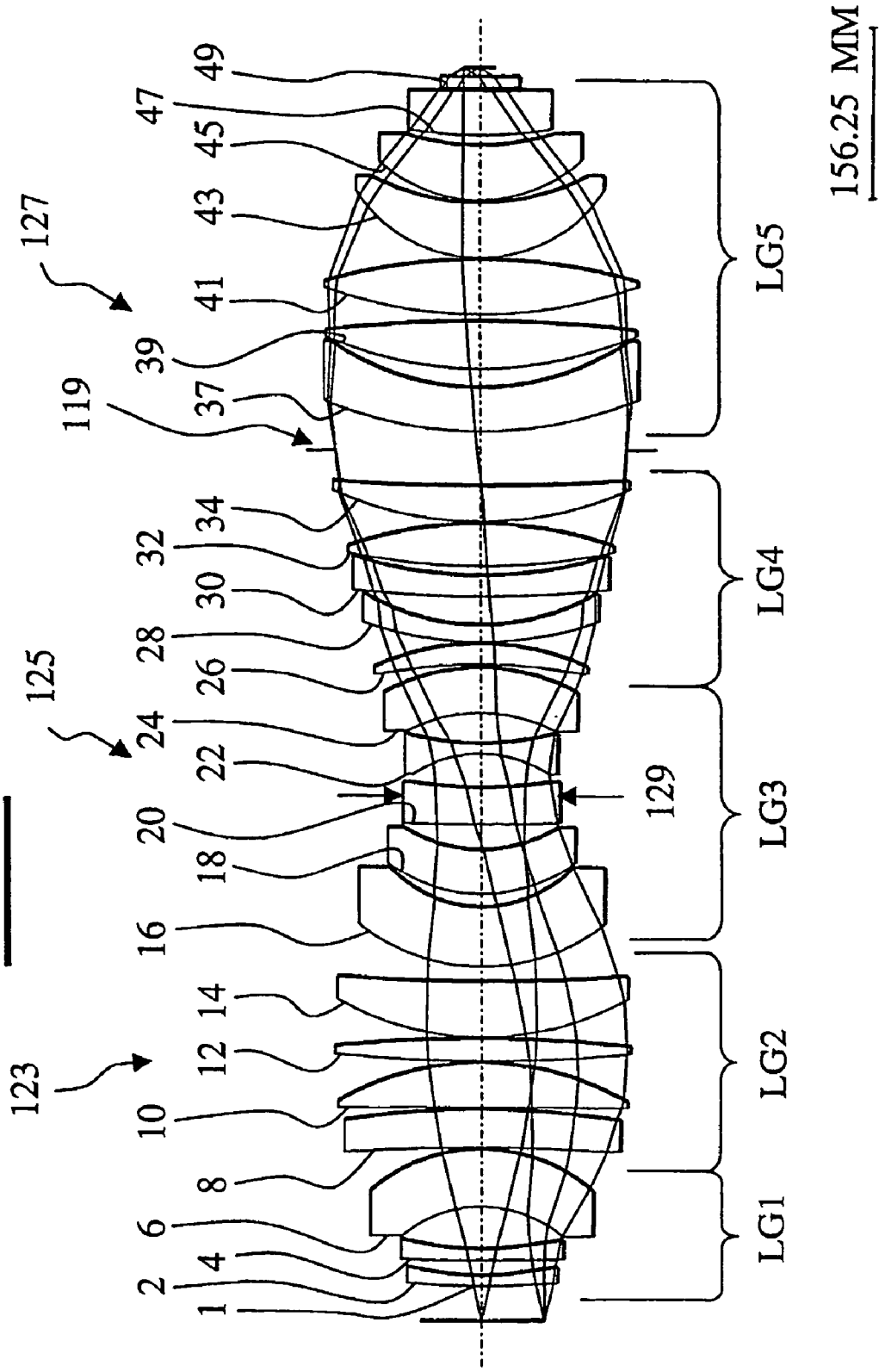
49
47
45
43
41
39
37
127
119
34
32
30
28
26
24
22
125
20
18
16
14
12
10
8
6
4
2
1
123
129
LG5
LG4
LG3
LG2
LG1
156.25 MM

FIG.2

FIG.2a

LONGITUDINAL SPHERICAL ABER.

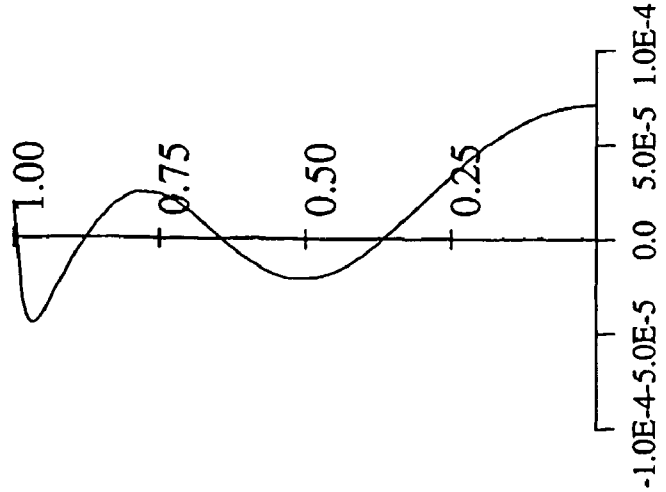

FIG.2b

ASTIGMATIC FIELD CURVES

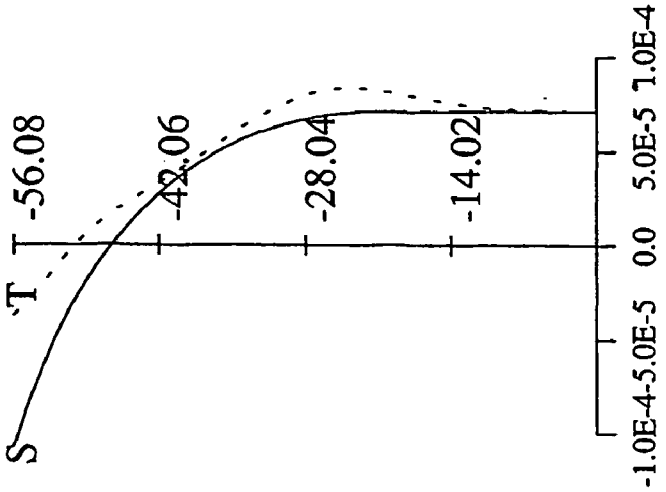

FIG.2c

DISTORTION

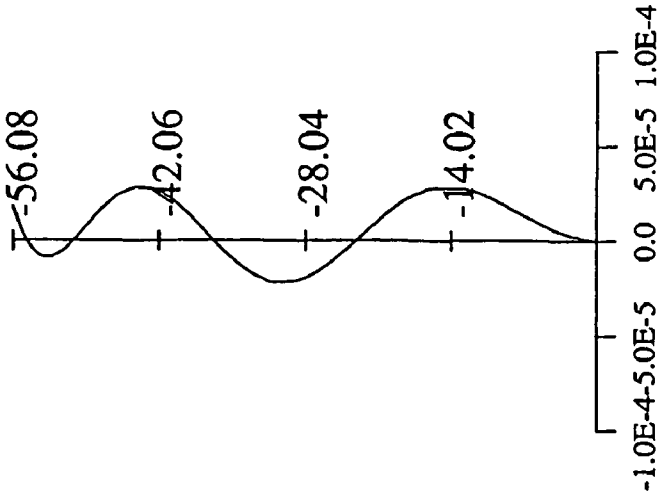

FIG.3

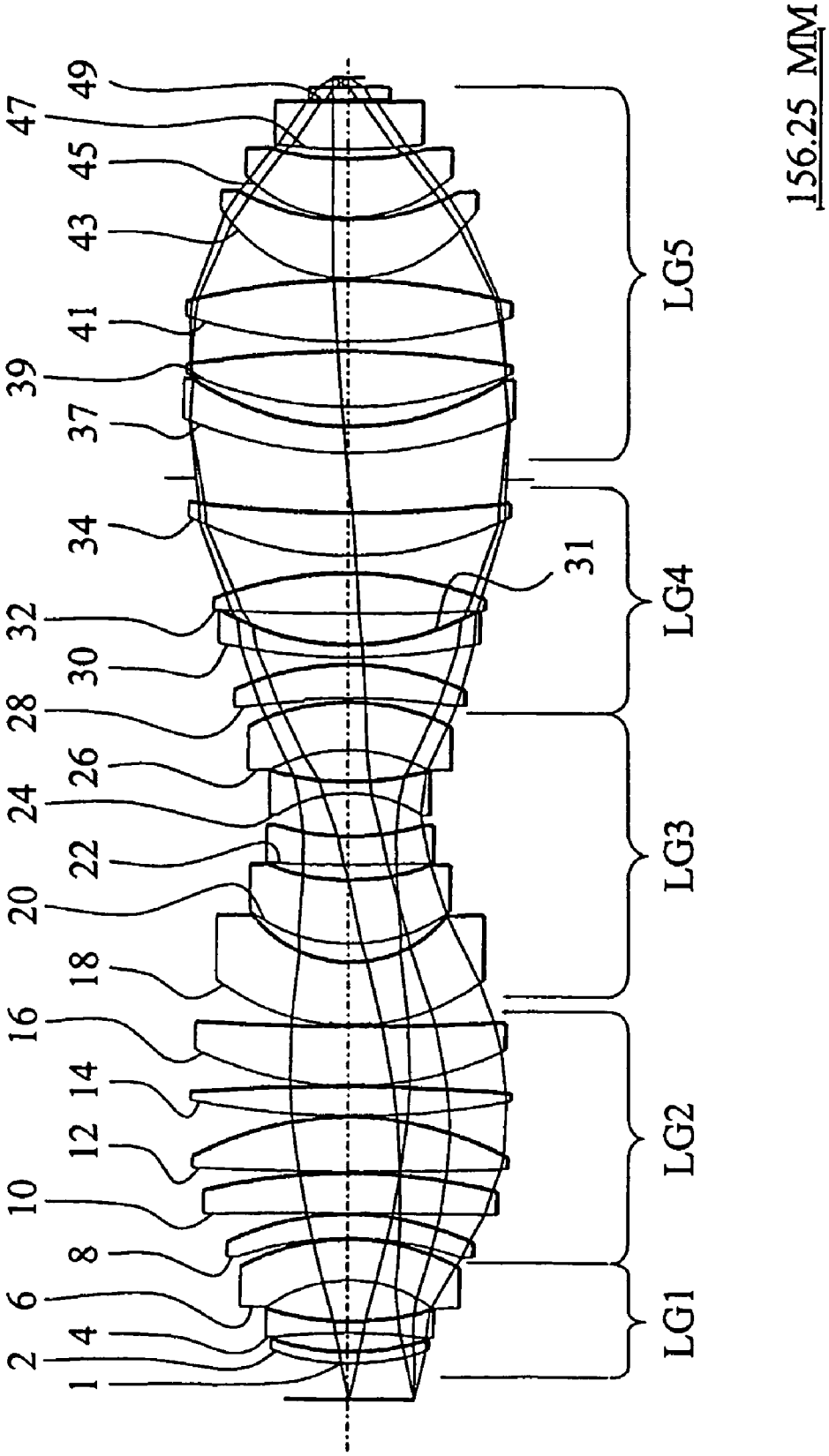
1
2
4
6
8
10
12
14
16
18
20
22
24
26
28
30
32
34
37
39
41
43
45
47
49
31
LG1
LG2
LG3
LG4
LG5
156.25 MM

FIG.3a

LONGITUDINAL SPHERICAL ABER.

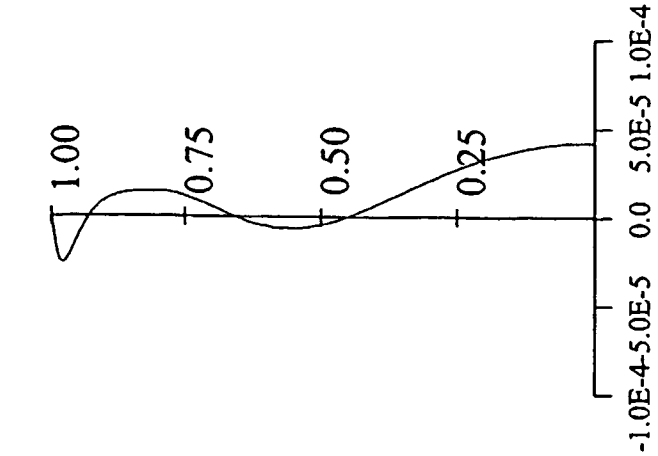

FIG.3b

ASTIGMATIC FIELD CURVES

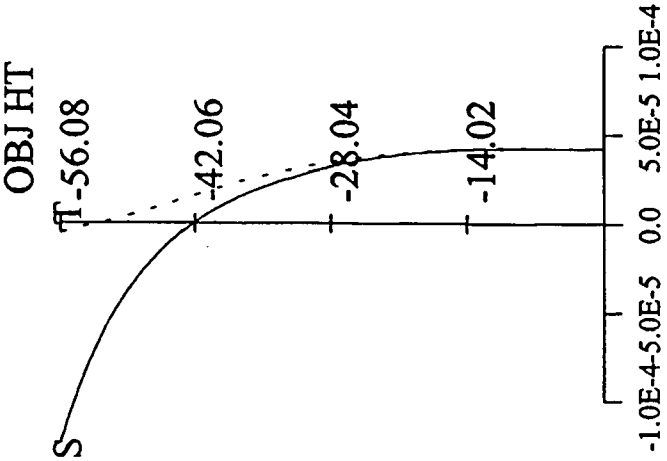

FIG.3c

DISTORTION

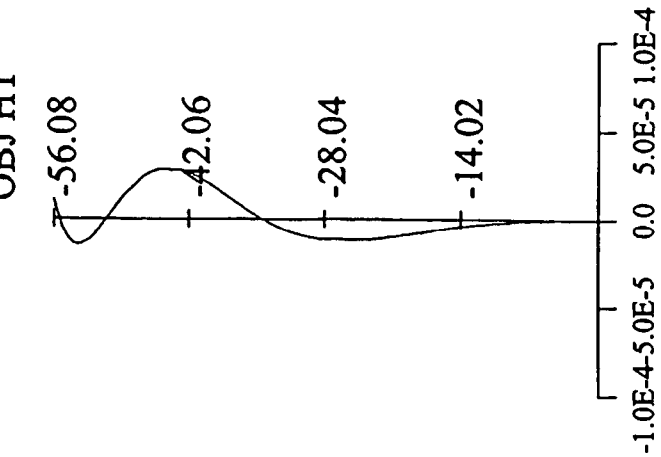

FIG.4

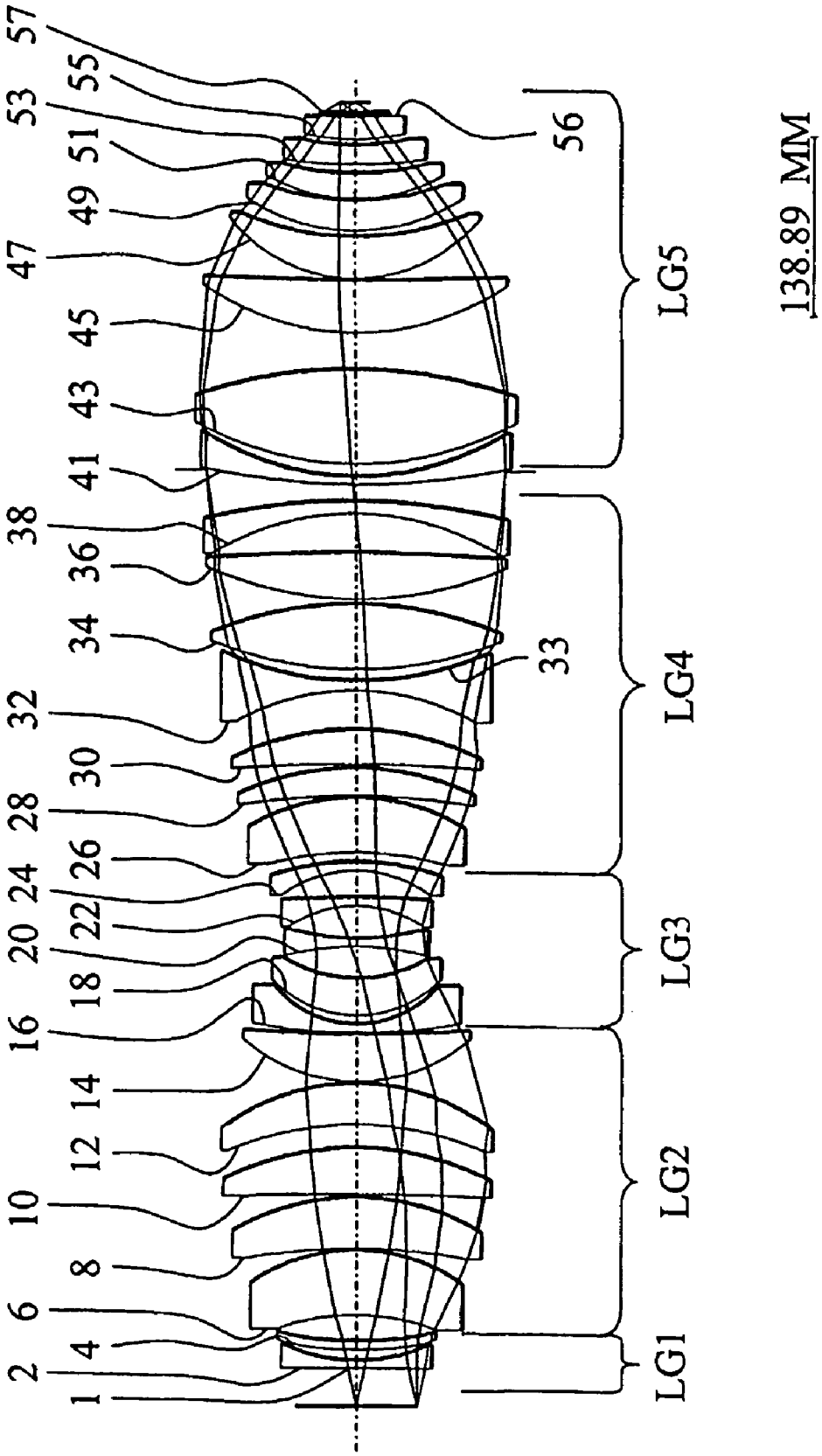
57
55
53
51
49
47
45
43
41
38
36
34
32
30
28
26
24
22
20
18
16
14
12
10
8
6
4
2
1
56
33
LG5
LG4
LG3
LG2
LG1
138.89 MM

FIG.4a

LONGITUDINAL SPHERICAL ABER.

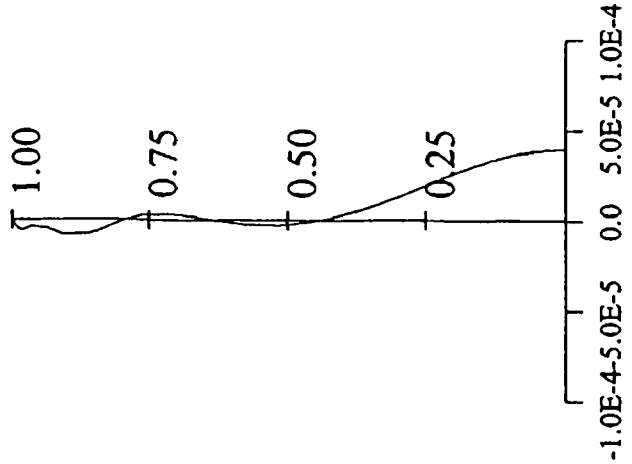

FIG.4b

ASTIGMATIC FIELD CURVES

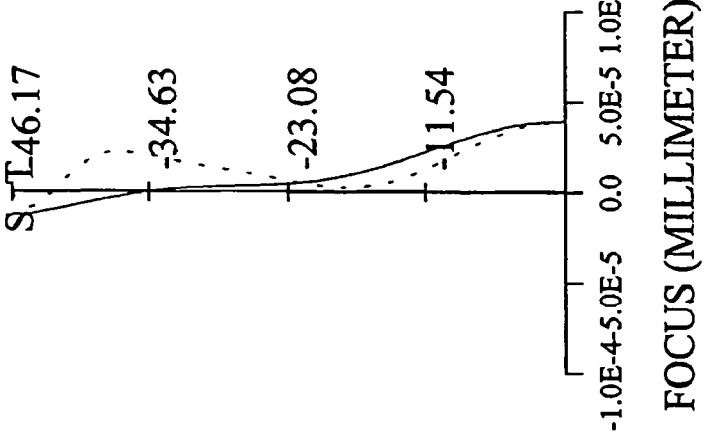

FIG.4c

DISTORTION

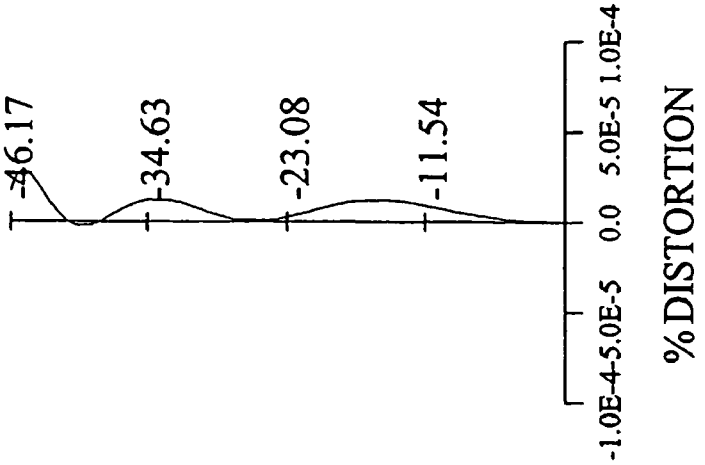

FIG.5

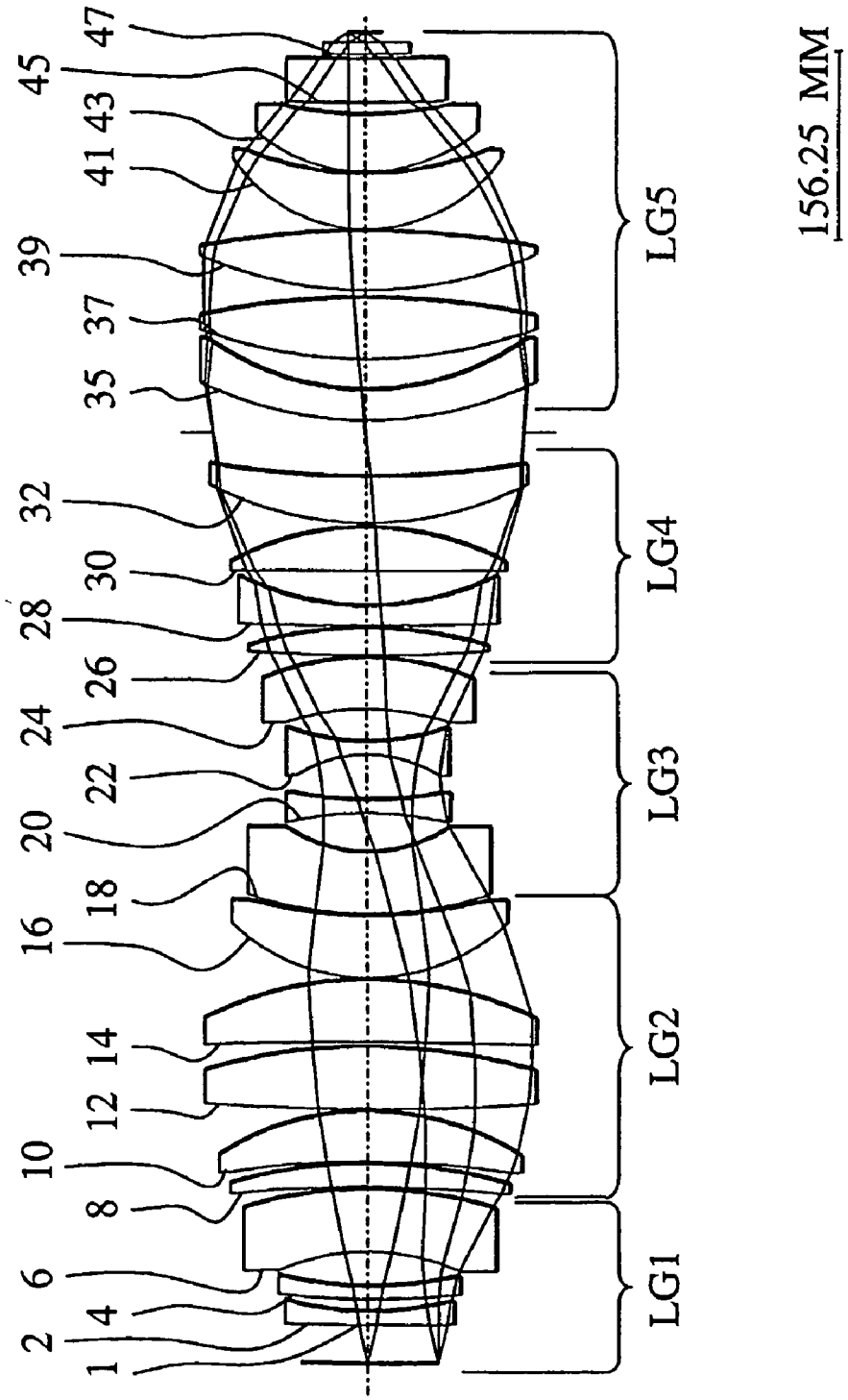
1
2
4
6
8
10
12
14
16
18
20
22
24
26
28
30
32
35
37
39
41
43
45
47
LG1
LG2
LG3
LG4
LG5
156.25 MM

FIG.6

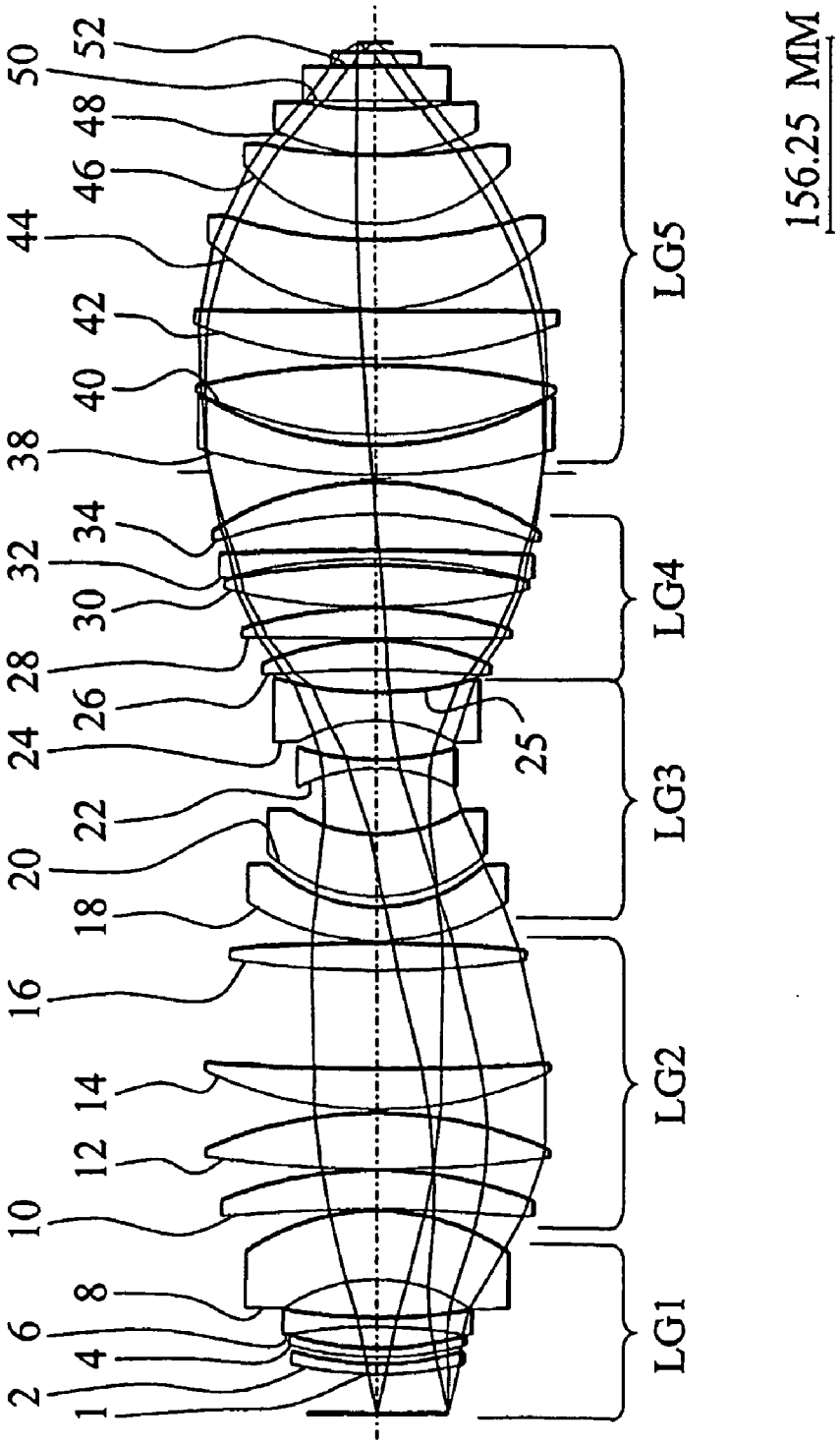
1
2
4
6
8
10
12
14
16
18
20
22
24
25
26
28
30
32
34
38
40
42
44
46
48
50
52
LG1
LG2
LG3
LG4
LG5
156.25 MM

FIG.6a

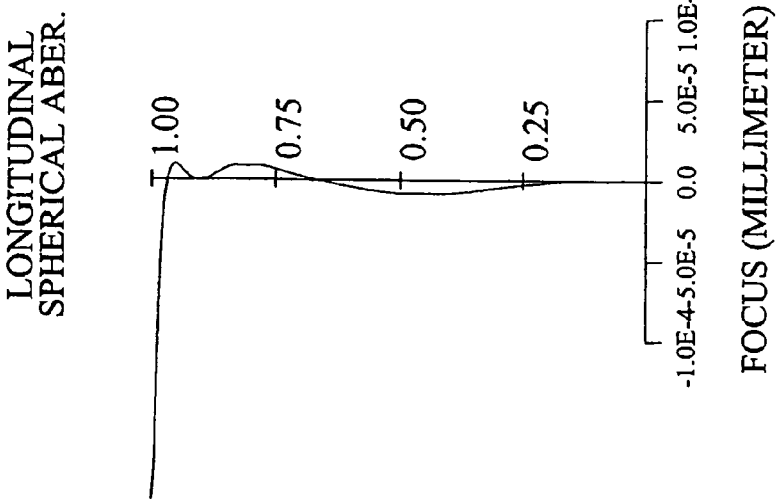

FIG.6b

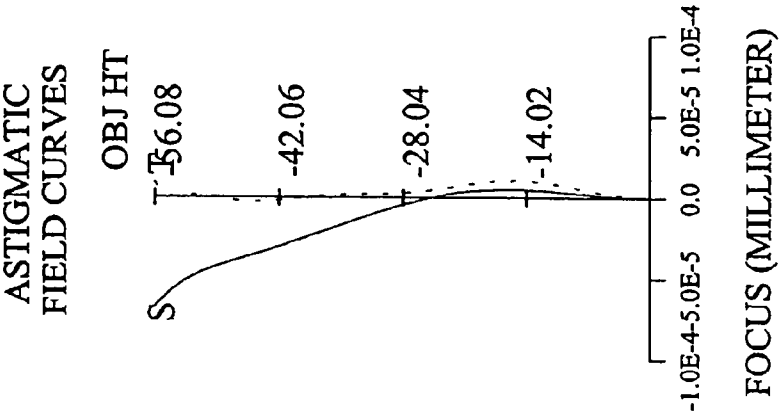

FIG.6c

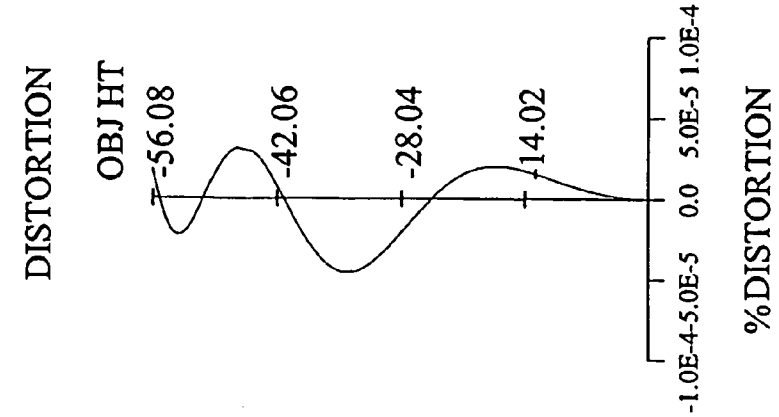

FIG.7

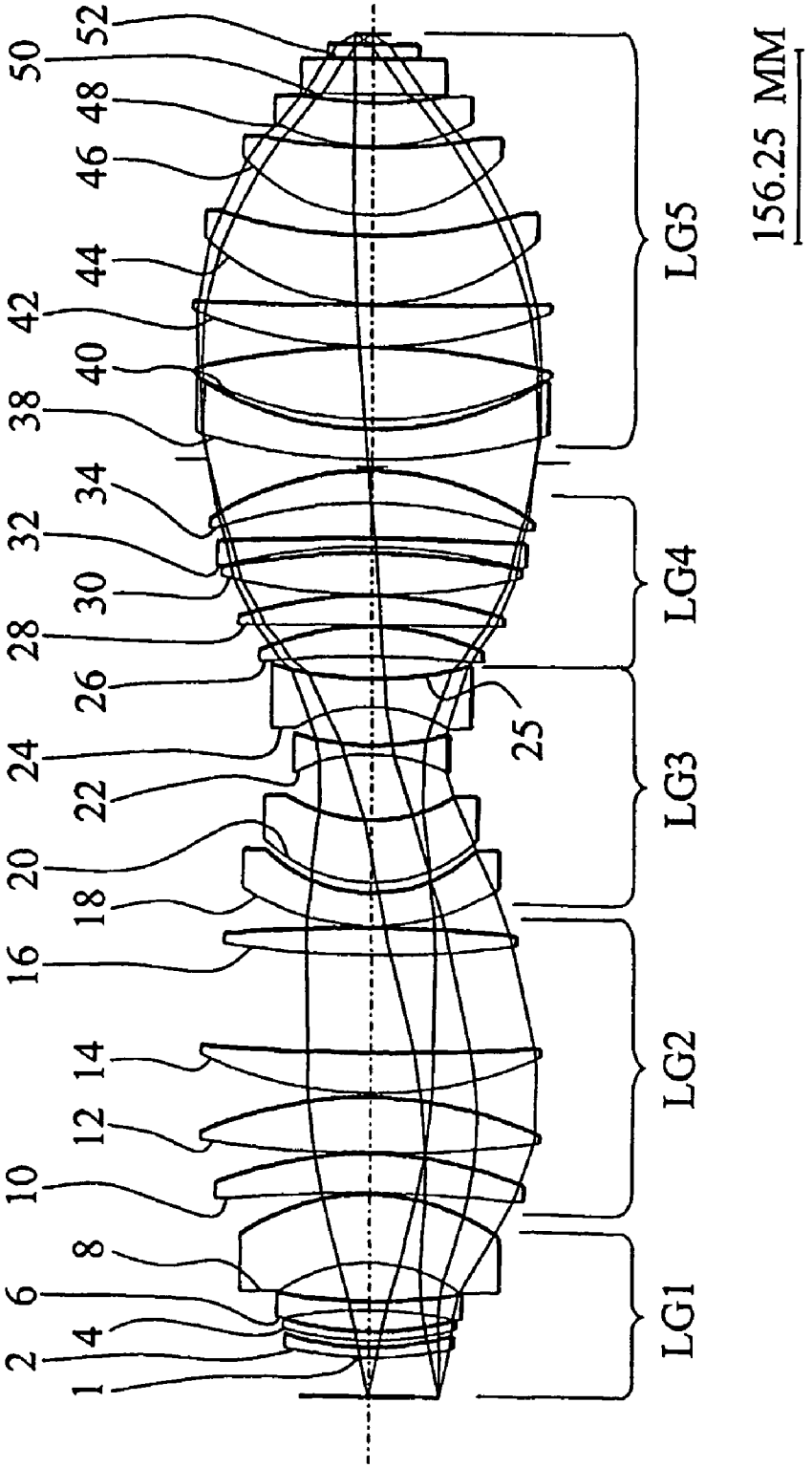
1
2
4
6
8
10
12
14
16
18
20
22
24
26
28
30
32
34
38
40
42
44
46
48
50
52
25
LG1
LG2
LG3
LG4
LG5
156.25 MM

FIG.7a

LONGITUDINAL SPHERICAL ABER.

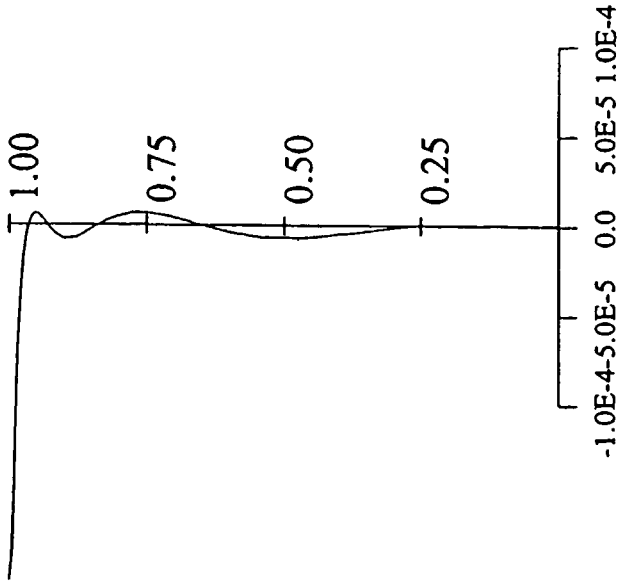

FIG.7b

ASTIGMATIC FIELD CURVES

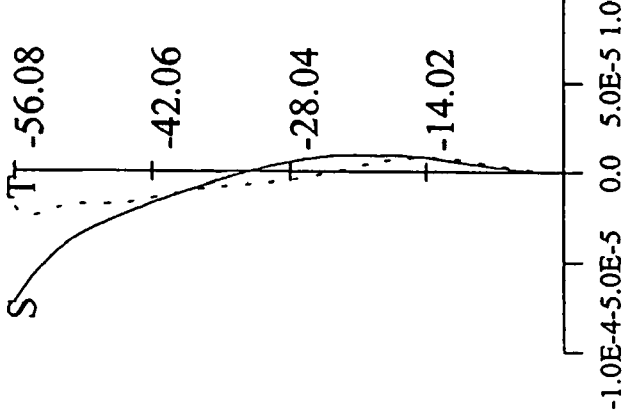

FIG.7c

DISTORTION

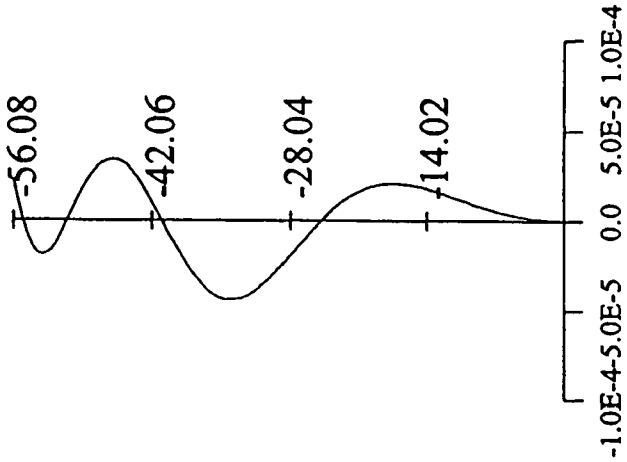

FIG.8

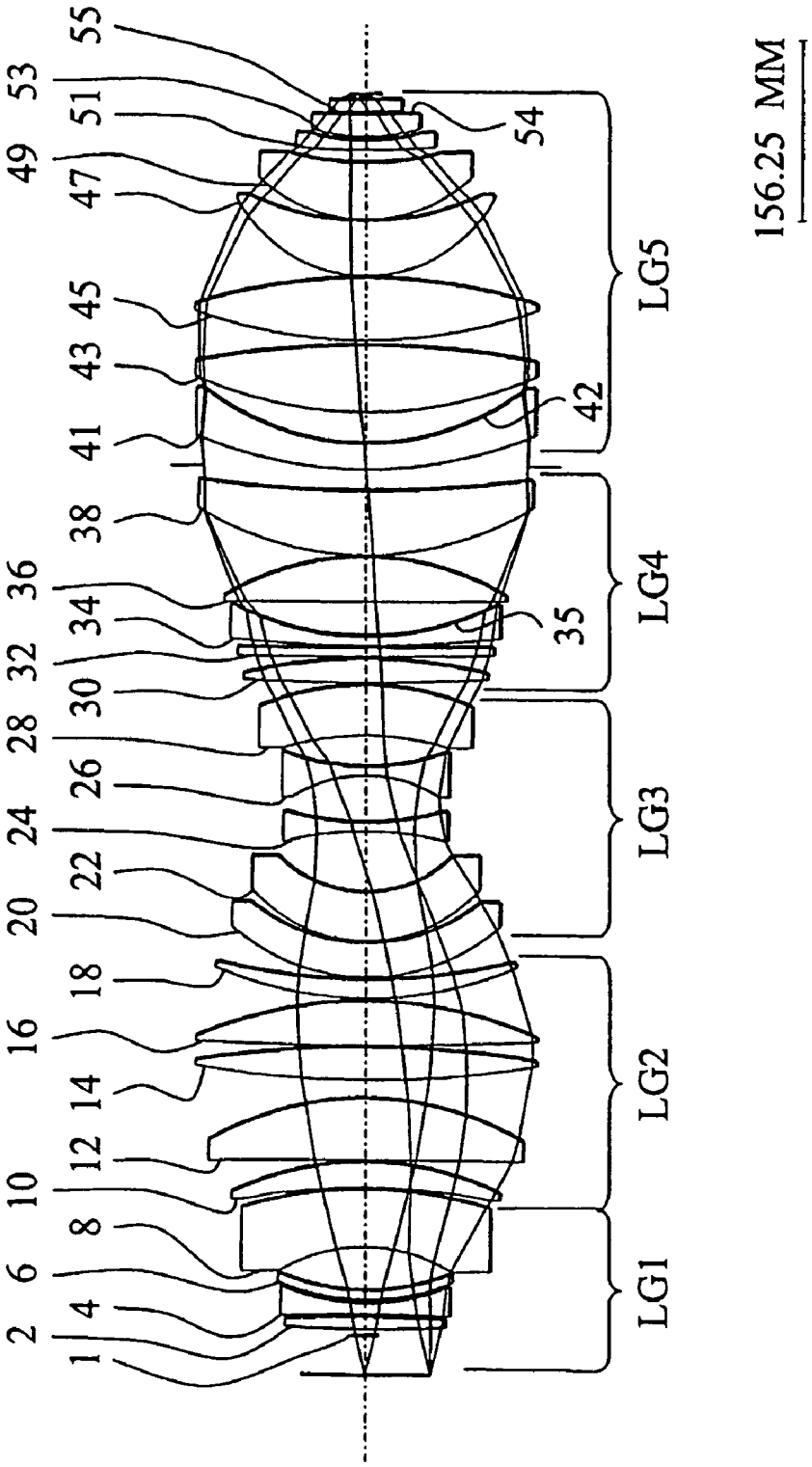
55
53
51
49
47
45
43
41
38
36
34
32
30
28
26
24
22
20
18
16
14
12
10
8
6
4
2
1
54
42
35
LG5
LG4
LG3
LG2
LG1
156.25 MM

REFRACTIVE PROJECTION OBJECTIVE

This application is a continuation-in-part application of international patent application PCT/US03/06592, filed on Mar. 3, 2003 and claiming priority of U.S. provisional application 60/360,845 filed on Mar. 1, 2002, which international application was published in English as WO 03/075049 A2 on Sep. 12, 2003. The complete disclosure of the international patent application is incorporated into this application by reference. Benefit is claimed from provisional application US 60/360,845 filed on Mar. 1, 2002. International patent application PCT/US03/06592 is based on international patent application PCT/EP03/01147 filed on Feb. 6, 2003, claiming priority of U.S. Pat. No. 60/360,845 filed on Mar. 1, 2002 and published in German as WO 03/075096 A2 on Sep. 12, 2003. The complete disclosure of this latter international patent application is also incorporated into this application by reference.

BACKGROUND OF THE INVENTION

1. Field of the Invention

The invention relates to a refractive projection objective for microlithography, which consists, in the direction of light propagation, of a first convexity, a waist, and a second convexity. Such refractive projection objectives are also termed "single-waist" systems

2. Description of the Related Art

Such single-waist systems are known, for example, from U.S. Pat. No. 60/160799, EP 1 061 396 A2, and from EP 1 139 138 A1 or WO 01/23933-WO 01/23935. It is already known from these documents that the first or the first two object-side lenses have negative refractive power. Furthermore it is known from these documents that the imaging quality can be increased by the use of aspherics. Since the resolution attainable with a projection objective increases in proportion to the image-side numerical aperture of the projection objective, and furthermore in proportion to the reciprocal of the exposure wavelength, the endeavor is predominantly to provide projection objectives with the greatest possible numerical aperture in order to increase the resolution.

U.S. Pat. No. 6,560,031 shows another refractive projection objective having one waist and a first, object-side lens having negative refractive power, wherein at least one lens which is arranged between the object plane and the waist comprises an aspherical surface.

International patent application PCT/E 02/04846 filed on May 3, 2002 by the applicant and claiming priority of DE 102 10 899.4 filed on Mar. 8, 2002 shows other single-waist systems allowing very high image-side numerical apertures NA≧0.85, where values of NA≧1 can be obtained e.g. if used in conjunction with an immersion liquid.

US patent application US 2004/0120051 A1 based on international patent application PCT/EP03/01651 filed on Feb. 9, 2003 and claiming priority of provisional application 60/360,845 filed on Mar. 1, 2002 shows another refractive projection objective having one defined waist and negative lenses on the object-side entry.

International patent application PCT/EP03/01954 filed on Feb. 26, 2003 and claiming priority of DE 102 10 899.4 filed on Mar. 8, 2002 and corresponding to U.S. patent application Ser. No. 10/379,809 filed on Mar. 6, 2003 shows refractive projection objectives for immersion lithography designed as single-waist systems.

US patent application US 2004/0004757 A1 filed on May 5, 2003 and claiming priority of PCT/EP02/04846 filed on May 3, 2002 and DE 102 24 361 filed on May 24, 2002 discloses very-high aperture projection objectives designed as single-waist systems having a belly (or convexity) near the object, a belly near the image and a waist defined therebetween, where a negative group which has an effective curvature with a concave side directed towards the image is arranged in a region of divergent radiation between the waist and the system diaphragm arranged in the belly near the image. The disclosure of this document is incorporated herein by reference.

It is furthermore necessary, with the requirements set on a projection objective in microlithography, to use selected materials of high quality. Fluoride materials are in particular only available to a limited extent at present in the required quality. For example, at an exposure wavelength of 193 nm, a few lenses of calcium fluoride are used for compensation of chromatic aberration in projection objectives designed for this wavelength. Furthermore, calcium fluoride lenses, which are not so sensitive as regards compaction, are preferably used close in front of the wafer.

SUMMARY OF THE INVENTION

It is one object of the invention to provide a refractive projection objective which, with a high numerical aperture, has reduced production costs due to a reduced use of material. It is another object of the invention to provide a refractive projection objective which has an image side numerical aperture NA>0.7, a good correction of image aberrations and a small number of lenses. It is another object of the invention to provide a refractive projection objective which has an image side numerical aperture NA>0.7, a good colour correction and which can be manufactured from lenses made from one material only.

To address these and other objects the invention, according to one formulation of the invention, a refractive projection objective for microlithography with a numerical aperture NA greater than 0.7 is provided, consisting of:

- a first lens group immediately following an object plane of the projection objective and having negative refractive power;
- a second lens group immediately following the first lens group and having positive refractive power;
- a third lens group immediately following the third lens group and having negative refractive power for generating a constriction of a light beam passing through the projection objective;
- a fourth lens group immediately following the third lens group and having positive refractive power; and
- a fifth lens group immediately following the fourth lens group and having positive refractive power;
- the projection objective thereby consisting of a first convexity, a second convexity, and a waist arranged between the first and second convexity, wherein the first convexity has a maximum diameter denoted by D1, and the second convexity has a maximum diameter denoted by D2, and wherein $0.8<D_1/D_2<1.1$.

Reducing the maximum diameter of the second convexity was found particularly advantageous in the context of the above objects.

An arrangement of diverging lenses in the entry region of the objective, particularly of three negative lenses, contribute to the shortening of the projection objective, which advantageously affects the space requirement needed for the projection objective in the projection exposure device. Furthermore, a shortening of the projection objective also

implies a reduction of the lenses used, so that the material used and the production costs can be reduced.

It has been found to be advantageous, for the compensation of spherical aberrations of higher order which are produced by a high numerical aperture in the end region of the projection objective, to provide strongly curved meniscuses which have negative refractive power and which are arranged between the narrowest constriction in the waist and the diaphragm and directly after the diaphragm.

It has been found to be advantageous that these meniscuses have a convex surface on the side turned toward the object.

According to another formulation it has been found advantageous in a projection objective which is designed as a purely refractive single-waist system with a belly (convexity) near the object, a belly (convexity) near the image and a waist therebetween, to arrange in a region of divergent radiation between the waist and the system diaphragm a negative group which has an effective curvature with a concave side directed towards the image. The negative group may be particularly beneficial in combination with a negative meniscus lens having an image side concave surface and arranged immediately behind the diaphragm. An object side negative meniscus of the negative group may be beneficial in combination with a meniscus lens having an image side convex surface immediately ahead. This meniscus lens may be a positive lens.

A "negative group" in this sense is a lens group with an overall negative refractive power, the lens group being able to comprise one or more lenses. The negative group is bent as a whole relative to the beam path as a result of the effective curvature. This curvature can be characterized by a surface of curvature whose centre of curvature is situated on the image side. The effective curvature of the lens (or of the surface of curvature) is characterized by a radius of curvature r_c which is calculated as follows for a lens whose entry surface has the radius r_1 and whose exit surface has the radius r_2:

$$1/r_c=1/(2*r_1)+1/(2*r_2) \quad (1)$$

If the negative group comprises two or more lenses, the effective curvature of the group is calculated as follows:

$$1/r_c=1/(n*r_1)+1/(n*r_2)+1/(n*r_3)+1/(n*r_4)+ \quad (2)$$

n specifying the number of surfaces.

Together with the divergence of the radiation in the region of the lenses, the effective curvature concave towards the image has the effect that high incidence angles occur particularly on the exit sides of the one or more lenses of the negative group. These are very effective above all for correcting aberrations of high order, in particular for aperture-dependent correction, (which act to overcorrect) of monochromatic aberrations in the image field zone and edge of the image field. Here, the negative group can create at least partially corrective functions such as would be possible otherwise only by providing a further waist.

In a development, the negative group comprises at least one lens with negative refractive power and a concave surface directed towards the image. By splitting, the negative refractive power can also be distributed over a plurality of such, consecutive lenses of negative refractive power, the centers of curvature for the image-side exit surfaces being situated in each case on the image side. Here, a particularly material-saving, compact design is possible in the case of the use of only one or two such lenses of negative refractive power. If two lenses are lined up, it is advantageous when the refractive power of the first, object-side lens is greater than that of the subsequent, image-side lens of the group. These negative lenses can be configured as negative meniscus lenses.

It has been found to be advantageous to provide two meniscuses between the narrowest constriction of the light beam in the waist and the diaphragm, with their convex lens surfaces turned toward each other.

It has furthermore been found to be advantageous to provide a free region in the second convexity, for the arrangement of a system diaphragm. It is possible, by providing this free region, to provide a diaphragm which is axially displaceable.

Furthermore, with a constructional space of this kind available for the arrangement of the diaphragm, the use of curved diaphragms is also provided for without problems.

It has been found to be advantageous to specifically select the lens surfaces provided so that the entry and exit angle of the ray falling on the lens, or the radiation leaving the lenses, is smaller than 60°. This measure has a particularly advantageous effect on the usable coatings of the lenses, or simpler coatings can be provided as antireflection coating, since the effectiveness of such coatings as an antireflection coating depends in particular on the angle of incidence of the incident radiation.

However, it was found that with high (image-side) numerical apertures beyond 0.7, such incident or exit angles at the refractive elements, namely lenses and cover plate (next to the image plane), in excess of 60 degrees are unavoidable. Now it was found that imaging errors produced by this can be advantageously compensated by some refractive elements within the objective, which have maximum incident or exit angles of just as high values exceeding 60 degrees. Preferred locations for these elements are given. Additionally, few elements having angles between 50 to 60 degrees are useful.

Further advantageous measures are described in further claims.

The invention is explained in detail using the following embodiment examples. These embodiment examples are not to be considered as limiting.

BRIEF DESCRIPTION OF THE DRAWINGS

FIG. **1** shows a projection exposure device;

FIG. **2** shows a projection objective for the wavelength 193 nm;

FIG. **3** shows a projection objective for the exposure wavelength 193 nm;

FIG. **4** shows a projection objective for the wavelength 193 nm;

FIG. **5** shows a projection objective for the exposure wavelength 157 nm;

FIG. **6** shows a projection objective for the wavelength 193 nm;

FIG. **7** shows a projection objective for the exposure wavelength 193 nm; and

FIG. **8** shows a projection objective for the wavelength 193 nm.

DETAILED DESCRIPTION OF THE PREFERRED EMBODIMENTS

The principal construction of a projection exposure device **101** for microlithography is first described using FIG. **1**. The projection exposure device **101** has an illuminating device **103** and a projection objective **105**. The projection objective

105 includes a lens arrangement 121 with an aperture diaphragm 119, an optical axis 107 being defined by the lens arrangement 121.

A mask 109, held by a mask holder 111 in the beam path, is arranged between the illuminating device 103 and the projection objective 105. Such masks 109 used in microlithography have a micrometer to nanometer structure which is imaged with a reduction by a factor of up to 10, in particular by a factor of 4, by the projection objective 105 or respectively by the lens arrangement 121, on an image plane 113. A substrate or respectively a wafer 115 is held positioned by a substrate holder 117 in the image plane 113. The minimum structures which can still be resolved depend on the wavelength of the light used for the exposure and also on the aperture of the projection objective 115, the maximum attainable resolution of the projection exposure device increasing with decreasing wavelength and increasing image-side numerical aperture of the projection objective 105.

Possible lens arrangements 121 of the projection objective 105 are shown in detail in FIGS. 2–8. The lens arrangements 121 shown, which can also be termed designs, have an image-side numerical aperture of 0.85 or 0.9. The designs shown in FIGS. 2–4 and 6–8 are designed for the exposure wavelength of 193 nm. The projection objective shown in FIG. 5 is designed for the exposure wavelength of 157 nm. It is common to all these designs that the aberrations which arise are very small and thus structure widths down to 70 nm can be resolved. Here on the one hand the wavefront error is less than 5/1,000 of the wavelength of the light used for exposure, and on the other hand the distortion is smaller than 1 nm. The longitudinal chromatic error is smaller than 380 nm/pm. The large field size of 26×10.5 mm^2, in which the imaging is highly corrected in this fashion, makes productive use possible in microlithography. These projection objectives with such lens arrangements are especially suitable for use in lithographic scanning devices, because of the configuration of the field size or respectively of the field format.

Before going into the excellent optical properties of the lens arrangements 121 shown in FIGS. 2–8, the principal structure of these lens arrangements 121 will first be described in detail. In the propagation direction of the light beam, the lens arrangements 121 have a first convexity 123, a waist 125, and a second convexity 127. The waist 125 includes a place of narrowest constriction 129. A system diaphragm 119 is arranged in the second convexity.

These lens arrangements may also be divided into five lens groups LG1–LG5. The first lens group LG1 includes three negative lenses with the lens surfaces 2–7. The first two negative lenses are preferably curved toward the object. The third negative lens is preferably a meniscus lens which is curved toward the image. The second lens group LG2 adjoins this first lens group, and has positive refractive power, the lens of maximum diameter of the first convexity being arranged in this second lens group. This second lens group LG2 preferably includes exclusively lenses of positive refractive power.

The third lens group LG3 adjoins this lens group LG2 and has negative refractive power. This third lens group LG3 includes at least three successive lenses of negative refractive power. A fourth lens group LG4 adjoins this third lens group LG3 and has positive refractive power. This fourth lens group LG4 ends before the diaphragm.

A fifth lens group LG5 is formed by the lenses arranged after the system diaphragm 119, and likewise has positive refractive power. This fifth lens group LG5 includes a lens of maximum diameter in the second convexity, this diameter being denoted by D2.

All of these examples are distinguished by an excellent correction of the wavefront. The image errors which arise are corrected to values smaller than 5/1,000 of the wavelength. The principal ray distortion is connected to values smaller than 1 nm.

The advantageous effect of the present distribution of refractive power is amplified by the use of aspherics. The two aspherics on the diverging lenses in the first lens group LG1 serve principally for correction of the distortion and the object-side and image-side telecentricity of the principal rays of the outermost field point.

The third lens group LG3 begins with a weakly diverging meniscus lens, whose convex side is arranged turned toward the mask 109. This meniscus is followed by a lens with positive refractive power and at least two strongly diverging biconcave lenses. If aspherics are provided in this second lens group LG2, these are arranged on a concave surface turned toward the wafer. For the correction of higher terms of the aperture aberration and of the coma, at least one aspheric is arranged in each of the lens groups LG4 and LG5, or respectively before and after the diaphragm in the neighborhood of the greatest diameter of the second convexity. At least one diverging meniscus is arranged between the waist and the diaphragm, and thus in the fourth lens group LG4. In the preferred embodiments, FIGS. 2 and 3, this has a concave surface turned toward the wafer and hence a similar shape to the diverging meniscus following directly behind the diaphragm.

The state of correction is shown in FIGS. 2*a*–2*c* through FIGS. 7*a*–7*c* for each example, using curves of the spherical aberration, and of astigmatism, and the characteristics for the RMS value of the wavefront. The RMS values, which correspond to the mean square wavefront deformation, may be determined as follows:

$$W_{RMS}=\sqrt{(\langle W^2\rangle-\langle W\rangle^2)}$$

with W as wavefront error and the acute parentheses as operand for the formation of the mean value.

The longitudinal chromatic error CHL, which is determined as follows:

$$CHL=\frac{s'(\lambda_1)-s'(\lambda_2)}{\lambda_1-\lambda_2}$$

is given in Table 1 (attached). Here s' is the paraxial image width after the last surface and λ_1 and λ_2 are reference wavelengths. CHL is given in nm per pm.

The choice of a single-waist system has an advantageous effect on the appearance of chromatic errors, which are usually corrected, as for example in WO 01/23935, by the use of at least two materials, for example, by SiO_2 and CaF_2 at a wavelength of 193 nm.

In contrast to this, in the embodiment examples shown in FIGS. 2–8, the use of only one material is provided, wherein outstanding image quality as regards chromatic aberrations could be attained precisely by the arrangement of the meniscuses provided after the position of the narrowest constriction. This image quality is distinguished by a longitudinal chromatic aberration or "axial color" smaller than 385 nm per pm. The color magnification aberration or "lateral color" is smaller than 0.8 ppm/pm, which represents

an outstanding value. This corresponds to a color magnification aberration of 11 nm/pm at the image edge. (ppm stands for parts per million).

The use of a possible additional, second material can be provided for the correction of chromatic aberration and/or at places where a high energy density appears, to avoid compaction and rarefaction effects. Compaction and rarefaction effects mean here, changes of refractive index, depending on the material, in regions of high energy density.

The excellent image quality as regards chromatic aberration is supported by the shapes of the two convexities. The ratio of the maximum diameter of the first convexity, D1 and of the second convexity, D2, satisfies the following conditions:

$$0.8<D1/D2<1.1.$$

Preferably, 0.8<D1/D2<1.0.

In the present examples, all the lens arrangements **121** have a numerical aperture of at least 0.85. However, it is of course possible to use this special arrangement in a lens arrangement which has a smaller image-side numerical aperture, in order to provide a larger field with unreduced image quality, or to further improve the image quality over the qualities shown using the embodiment examples, or to be able to reduce the use of aspherics. The designs are distinguished by small ray deflections or ray angle at most surfaces, in spite of high numerical aperture. Only small image aberrations of higher order are thereby generated.

Since the high angle of incidence in the neighborhood of the wafer on the lenses and the plane-parallel closure plate is unavoidable, aberrations of higher order are inevitably generated. In order to compensate these aberrations of higher order, few surfaces in the system are provided at which the incident radiation, or the radiation exiting from the lens, has a large angle of incidence or angle of refraction, which by choice of the sign opposes an aberration of higher order. In the examples, the strongly curved meniscuses are provided which have negative refractive power and which are arranged in the fourth and fifth lens groups. However, most of the lenses, at least 80% of all the lenses, have lens surfaces on which the entering light has an angle of incidence of less than 60°. The same holds for the lens surfaces at which the radiation exits again.

The possibilities of optimum coating of the lenses are thereby simplified, or respectively a back-reflection at the lens surfaces can be further reduced, since the effectiveness of such coatings depends strongly on the angle of incidence and as a rule decreases with increasing angle of incidence. It is not possible with a homogeneous layer system to obtain constant transmission over the whole surface and the full spectrum of the angle of incidence on the lens. Particularly in the transition zone of the angle region between 50° and 60°, the transmission worsens considerably with the same coating. It is therefore advantageous, firstly, to keep the angle of incidence in general as small as possible, and secondly, when large angles of incidence cannot be avoided for correction reasons, to position the lenses with the maximum angle of incidence in the neighborhood of the diaphragm. In this case, specific spectra of angle of incidence occur only in defined annular zones of the lens. In order to attain an optimum result as regards transmission, the coatings are varied in dependence on the radius, and thus are optimally matched to the respective region of angle of incidence.

These effects and advantages are shown here with purely refractive projection objectives, but in no way are limited to such, but as well apply to catadioptric projection objectives for microlithography, namely such with an image side refractive partial objective.

For the third embodiment according to FIG. **3**, and Table 3, Table 3a gives the maximum incidence/exit angle measured in the optically thin medium (gas) Imax in degrees for each surface as in Table 3, plus the sine of the angle SINImax, which is directly comparable to the NA value. While the entrance and exit surface **49**, **50** of the plane-parallel cover plate necessarily exceed Imax of 60 degrees with Imax=60, 70 degrees and the exit Imax of the last lens **47**, **48** very nearly reaches the limit with Imax (**48**)=59.99 degrees. Here, exactly one lens surface **31** exceeds the limit, too, with Imax=60.51 degrees.

It is a negative meniscus lens situated between the object plane 0 and the system aperture **36**, with the concave imageward surface **31** showing this extreme exit angle Imax=60.51 degrees, all this being preferred properties either singularly or in combination.

The fourth embodiment according to FIG. **4** and Table 4 has similar Imax properties shown in Table 4a. Cover plate **57**, **58** closing the projection objective from the atmosphere at the image plane **60**, where a wafer to be exposed is located, necessarily has an Imax=62 degrees, SIN Imax=0.88 equivalent to the (image side) numerical aperture NA. The exit surface **56** of the next lens **55**, **56** also has an Imax (**56**)=61.28 degrees and also incident surface **53** of the third refractive element from the image plane has an Imax (**53**)=52.60 degrees exceeding 50 degrees.

Now, for compensation, it is provided by optical design choice, that also surfaces **33** and **34** in the lens arrangement between object plane 0 and system aperture **40** have Imax (**33**)=64.50 degrees and Imax (**34**)=61.22 degrees. Neighboring surfaces repeatedly lend themselves to this use of high Imax angles. Additional compensation is obtained by surfaces having Imax in the range between 50 degrees and 60 degrees. Neighboring surfaces **42** and **43** on two of the four lenses located next to the system aperture **40** have Imax (**42**)=57.28 degrees and Imax (**43**)=52.49 degrees. This is a preferred position for high Imax corrective elements.

Additionally, also in the first lens group LG**1** neighboring surfaces **3** and **4** of the first and second lens show Imax (**3**)=59.47 degrees, almost=60 degrees, and Imax (**4**)=52.87 degrees, well in the additionally preferred 50 to 60 degree range.

The other incident angles are well kept down.

The sixth embodiment of FIG. **6**, Table 6 and Table 6a shows Imax to exceed 60 degrees at the four surfaces of the two refractive elements next to the image plane **54**, and specifically at surface **25** Imax (**25**)=65.26 degrees. This is situated at a location preferred by the inventors: between object plane 0 and aperture plane **37**, on an image wise concave plane, thus being an exiting angle, and within negative lens group LG**3**, which consists of the four lenses next to the waist, which is effected by the locally minimum beam diameter (see data in sixth column of Table 6) at surface **23** of negative lenses **22**, **23**.

Additionally, surfaces **39** and **40** of lenses **38**, **39** and **40**, **41** show Imax (39)=58.11 degrees and Imax (**40**)=52.80 degrees as an assisting correction means with an Imax in the range from 50 degrees to 60 degrees. All the other surfaces within the object have well reduced Imax values, as normally preferable, with only surface **26** next to **25** reaching Imax (**26**)=45.11 degrees.

Besides, only the most imageward planar plates **50**, **51** and **52**, **53** show the Imax=61.15 degrees, necessitated by the required high incidence angle at the image plane (wafer plane) **54**.

The seventh embodiment of FIG. **7**, Tables 7 and 7a, is very similar with respect to Imax to the sixth embodiment.

The eighth embodiment of FIG. **8** and Tables 8, 8a has the highest (image side) numerical aperture NA=0.90, and therefore, poses the most stringent requirements of all aspects of lens design and construction.

The high NA value of 0.90 necessitates an angle of incidence at image/wafer plane **57** of Imax (**57**)=64.94 degrees, which inevitably is already given at the entrance and exit planes **55**, **56** of the planar cover plate and at the planar exit plane **54** of the most imageward lens **53**, **54**.

Additionally, here, the concave entrance surface **51** of negative meniscus lens **51**, **52** being the third refractive element from the image plane **57**, shows Imax (**51**)=60.41 degrees and even exit surface **50** of the fourth refractive element **49**, **50** from the image plane **57** has a value Imax (**50**)=54.37 degrees, above the 50 degree limit already having strong effects on reflection.

As a counter measure, according to the invention, negative meniscus lens **41**, **42** second next to the system aperture **40** has an exit Imax (**42**)=61.53 degrees on the concave surface, and also negative meniscus lens **34**, **35** situated between object plane 0 and system aperture **40** in lens group LG**4** has an exit Imax (**35**)=63.97 degrees, counterbalancing the effects of the high angular load on the most imageward refractive elements at a preferred location.

An additional correcting high Imax is also provided on incident surface **38** of lens **38**, **39** situated next to the system aperture **40**, with an Imax (**38**)=54.37 degrees in the secondary preferred interval of 50 degrees–60 degrees. The two surfaces **42**, **38** with high Imax so near to the system aperture are especially well suited for antireflective coatings with radially varying layers compensating towards uniform reflective suppression of different incident/exit angles, as here their distribution is to a high degree rotationally symmetric and radially increasing.

Also, in lens group LG**3**, surface **27** near the beam waist in this group has a corrective Imax (**27**)=50.21 degrees angle in a described, advantageous position.

Additionally, also in the first lens group, LG**1**, much as in embodiment 4, two neighboring surfaces **5**, **6** show Imax (**5**)=50.60 degrees and Imax (**6**)=51.40 degrees in the 50 degree–60 degree region.

Other lens surfaces show well limited Imax angles as classically preferred.

It is to be noted that all tables recite surfaces in their sequence from the object plane 0, and that the drawings, FIGS. **2**–**8**, show these sequential numbers, where for sake of clarity essentially only every second one is enscribed, the others easily to be deduced.

In order to be able to provide the most varied diaphragm systems in the designs shown, a free region, denoted by L_{AP}, is provided in the region of the diaphragm. Thereby diaphragms can be used which can be moved toward the image in dependence on requirements. The most varied diaphragms can also be used, and diaphragm mounts can be provided which already have a mechanism for displacing the diaphragm, since sufficient constructional space must be available for the provision of such a structure. The last two of the lenses arranged before the system diaphragm **119** have to contribute considerably to the possibility of providing the free space L_{AP}.

A reduction of the required lens material could be attained by means of the small diameter D1 and D2 in the two convexities **123**, **127**, and the short constructional length 1,000–1,150 mm and the small number of lenses. A lens mass m of less than 55 kg could be attained in a few embodiment examples; see Table 1. The lenses in the lens arrangements shown in FIGS. **2**–**9** are in the range of 54–68 kg.

Systems with large numerical aperture tend to require especially large diameter in the second convexity **127** and a large constructional length OO'. The design of the transition between the waist and the second convexity is important for attaining the small convexity diameter and the manageable constructional length. Two converging meniscuses are used here, with their convex sides turned toward each other. Because of this arrangement, the maximum lens diameter, and thus in particular the mass of the lens blank required, can be kept small due to the design of the second convexity. In order to attain as small a mass as possible, the following relationship must be maintained:

$$L \cdot D_{max}/(NA \cdot 2yb) < 12{,}850$$

where L is the constructional length measured from reticle to wafer, NA the image-side numerical aperture, D_{MAX} the maximum diameter of the system, and is thus D1 or D2, and 2 yb is the diameter of the image field. It is particularly advantageous if the maximum diameter of the first convexity D1 is at most equal to the maximum diameter of the second convexity D2.

The data characterizing the respective lens arrangements **121** are given in the following Table 1 (attached). L_{geo} is the sum of the middle thicknesses of all the lenses of the objective. LV is a measure for the free constructional space around a system diaphragm, L_{AP} being the free distance from the last lens surface before the diaphragm as far as the first lens surface after the diaphragm.

$$LV = \frac{2 \cdot L_{AP} \cdot \left(\frac{L_{geo}}{L - L_{AP}}\right)}{L}$$

L_{geo} is the sum over the middle thicknesses of all the lenses arranged in the objective and L is the distance from the image plane O' to the object plane O.

The exact lens data of the lens arrangement shown in FIG. **2** can be gathered from Table 2 (attached).

The aspheric surfaces are described by the equation

$$P(h) = \frac{\delta \cdot h^2}{1 + \sqrt{1 - (1 - K) \cdot \delta^2 \cdot h^2}} + C_1 h^4 + \ldots + C_n h^{2n+2} \qquad \delta = 1/R$$

where P is the sagitta as a function of the radius h (height to the optical axis **7**) with the aspheric constants K, C_1–C_n given in the Tables. R is the vertex radius given in the Tables.

In FIGS. **2***a*–**2***c*, the distribution of the image errors over the image is shown. In FIG. **2***a*, the spherical longitudinal aberration is shown, with the relative aperture on the vertical axis and the longitudinal aberration on the horizontal axis. The course of the astigmatism can be gathered from FIG. **2***b*.

The object height is plotted in the vertical axis and the defocusing (mm) on the horizontal axis. The distortion is shown in FIG. **2***c*, the distortion in % on the horizontal axis being plotted against the object height on the vertical axis.

The exact lens data for the lens arrangement shown in FIG. **3** can be gathered from Table 3 and Table 3a (attached).

The spherical aberration, astigmatism and distortion are shown in FIGS. **3***a*–**3***c* as already described for FIGS. **2***a*–**2***c*.

The exact lens data for the lens arrangement shown in FIG. **4** can be gathered from Table 4 and Table 4a (attached).

The imaging quality as regards spherical aberration, astigmatism and distortion is shown in FIGS. **4***a*–**4***c*.

The exact lens data for the lens arrangement shown in FIG. **5** can be gathered from Table 5 (attached).

The exact lens data for the lens arrangement shown in FIG. **6** can be gathered from Table 6 and Table 6a (attached). Similarly, for Tables 7 and 7a and 8 and 8a, attached.

The above description of the preferred embodiments has been given by way of example. The individual features may be implemented either alone or in combination as embodiments of the invention, or may be implemented in other fields of application. Further, they may represent advantageous embodiments that are protectable in their own right, for which protection is claimed in the application as filed or for which protection will be claimed during pendency of the application. From the disclosure given, those skilled in the art will not only understand the present invention and its attendant advantages, but will also find apparent various changes and modifications to the structures and methods disclosed. The applicant seeks, therefore, to cover all such changes and modifications as fall within the spirit and scope of the invention, as defined by the appended claims, and equivalents thereof.

TABLE 1

	NA	D_1 mm	D_2 mm	L = 00' mm	L_{AP} mm	L_{geo} mm	D_1/D_2	Field mm^2	Number of asph	λ in nm	CHL nm/pm	m kg	LV	$\frac{NA \cdot L}{D_{MAX}}$
FIG. 2	0.85	258.7	275.3	1150	49.6	821.7	0.94	26 × 10.5	8	193	380.5	63	0.13	3.55
FIG. 3	0.85	266.7	279.4	1150	52.1	810.6	0.95	26 × 10.5	8	193	384.9	63	0.14	3.50
FIG. 4	0.85	199.5	235.8	999.8	12.5	688.5	0.85	22 × 6	8	157	529.5	57	0.04	3.6
FIG. 5	0.85	260	264	1100	46.1	794.5	0.98	26 × 10.5	8	193	370	60	0.13	3.54
FIG. 6	0.85	263.9	277.6	1098	6	728	0.95	26 × 10.5	6	193	396	54	0.016	3.36
FIG. 7	0.85	263.9	277.8	1098	9	726	0.95	26 × 10.5	6	193	392	54	0.023	3.36
FIG. 8	0.92	284.2	285	1107	18	777.2	1	26 × 10.5	9	1193	374	60	0.05	3.5

TABLE 2

SURFACE	RADIUS	THICKNESS	GLASSES	REFRACTIVE INDEX	½ FREE DIAMETER
0	0.000000000	32.000000000	L710	0.99998200	56.080
1	0.000000000	0.000000000	L710	0.99998200	63.104
2	727.642869160	10.000000000	SIO2HL	1.56028895	63.718
3	226.525323855AS	13.700039256	KE193	0.99971200	65.318
4	2211.534901544	10.867348809	SIO2HL	1.56028895	67.362
5	272.198328283AS	38.109427988	HE193	0.99971200	70.568
6	−110.268448226	53.110762192	SIO2HL	1.56028895	71.923
7	−150.645587119	1.027970654	HE193	0.99971200	97.325
8	−1859.686377061	35.612645698	SIO2HL	1.56028895	112.154
9	−785.737931706	1.605632266	HE193	0.99971200	120.907
10	−15567.860026603	41.231791248	SIO2HL	1.56028895	124.874
11	−255.699077104	1.000000000	HE193	0.99971200	126.787
12	1289.315128841	21.016190377	SIO2HL	1.56028895	129.339
13	−1288.131288834	1.000000000	HE193	0.99971200	129.365
14	260.564227287	51.423634995	SIO2HL	1.56028895	127.263
15	1730.695425203	13.188971653	HE193	0.99971200	122.159
16	176.011027540	55.000000000	SIO2HL	1.56028895	107.596
17	109.644556647	11.784016964	HE193	0.99971200	81.889
18	136.796552665	41.333702101	SIO2HL	1.56028895	81.527
19	127.780585003	23.051923975	HE193	0.99971200	68.904
20	2669.368605391	34.121643610	SIO2HL	1.56028895	68.053
21	355.264577081AS	30.898497897	HE193	0.99971200	62.218
22	−109.389008884	10.000000000	SIO2HL	1.56028895	61.017
23	249.223110659	27.598291596	HE193	0.99971200	66.233
24	−143.820224710	42.179010727	SIO2HL	1.56028895	67.085
25	−176.696299845	2.479524938	HE193	0.99971200	84.196
26	−475.210722340AS	19.825006874	SIO2HL	1.56028895	90.545
27	−224.363382582	1.042633596	HE193	0.99971200	93.106
28	308.609848426	16.000000000	SIO2HL	1.56028895	102.746
29	201.721667456	25.528839747	HE193	0.99971200	103.303
30	944.687071148AS	19.894794059	SIO2HL	1.56028895	104.495
31	366.820570030	8.208658436	HE193	0.99971200	112.097
32	574.278724113	39.477814236	SIO2HL	1.56028895	113.555
33	−358.531323193	1.326991422	HE193	0.99971200	116.205
34	320.594715977AS	33.261672159	SIO2HL	1.56028895	129.696
35	1861.755729783	32.119103109	HE193	0.99971200	129.674
36	0.000000000	17.287410699	HE193	0.99971200	130.664
37	361.690129139	40.443225527	SIO2HL	1.56028895	137.657

TABLE 2-continued

38	232.801533112	17.100750060	HE193	0.99971200	134.775
39	343.521129222	43.749080263	SIO2HL	1.56028895	135.562
40	−1180.085155420	5.861047182	HE193	0.99971200	136.059
41	404.126406350	50.820935982	SIO2HL	1.56028895	137.263
42	−499.905302311AS	1.129115320	HE193	0.99971200	136.399
43	132.000000000	50.889776270	SIO2HL	1.56028895	108.737
44	207.781260330	1.875778948	HE193	0.99971200	96.990
45	131.976080166	50.620041025	SIO2HL	1.56028895	88.265
46	216.108478997	8.560819690	HE193	0.99971200	66.515
47	345.785473120AS	40.780402187	SIO2HL	1.56028895	62.290
48	803.014748992	2.855378377	HE193	0.99971200	37.054
49	0.000000000	10.000000000	SIO2HL	1.56028895	33.755
50	0.000000000	8.000000000	L710	0.99998200	27.205
51	0.000000000	0.000000000		1.00000000	14.020

ASPHERIC CONSTANTS:

SURFACE NR. 3

K	0.0000
C1	−1.09559753e−007
C2	3.57696534e−012
C3	9.55681903e−017
C4	1.60627093e−020
C5	−2.38364411e−024
C6	9.48007957e−029
C7	6.17790835e−034
C8	0.00000000e+000
C9	0.00000000e+000

SURFACE NR. 5

K	0.0000
C1	−3.98669984e−008
C2	1.21202773e−012
C3	−2.54482855e−016
C4	2.63372160e−020
C5	−7.20324194e−024
C6	1.11610638e−027
C7	−6.59707609e−032
C8	0.00000000e+000
C9	0.00000000e+000

SURFACE NR. 21

K	0.0000
C1	−2.55118726e−008
C2	−2.20548948e−012
C3	−9.25235857e−017
C4	−3.33206057e−020
C5	6.94726983e−024
C6	−1.13902882e−027
C7	−1.90433265e−032
C8	0.00000000e+000
C9	0.00000000e+000

SURFACE NR. 26

K	0.0000
C1	−2.59102407e−009
C2	7.80412785e−013
C3	6.46009507e−018
C4	9.48615754e−022
C5	−5.98580637e−026
C6	−6.85408327e−031
C7	−1.22088512e−035
C8	0.00000000e+000
C9	0.00000000e+000

SURFACE NR. 30

K	0.0000
C1	−2.05499169e−009
C2	−9.59524174e−014
C3	3.47471870e−018
C4	−1.59033679e−023
C5	3.61312920e−027
C6	4.19166365e−031
C7	−6.21964399e−036
C8	0.00000000e+000
C9	0.00000000e+000

TABLE 2-continued

SURFACE NR. 34	
K	0.0000
C1	−5.41197196e−011
C2	2.68576256e−014
C3	1.97154224e−018
C4	−1.14136005e−023
C5	−6.50140227e−029
C6	−1.62666510e−032
C7	1.03803879e−037
C8	0.00000000e+000
C9	0.00000000e−000
SURFACE NR. 42	
K	0.0000
C1	4.81397179e−010
C2	−9.43105453e−016
C3	2.24359599e−019
C4	4.36770636e−024
C5	−6.88569878e−028
C6	4.99976924e−033
C7	−3.38683104e−039
C8	0.00000000e+000
C9	0.00000000e+000
SURFACE NR. 47	
K	0.0000
C1	−3.38379388e−008
C2	1.92297513e−012
C3	3.68388126e−016
C4	−4.26261424e−020
C5	−7.93153105e−025
C6	5.33775440e−028
C7	−3.98605335e−032
C8	0.00000000e+000
C9	0.00000000e+000

TABLE 3

SURFACE	RADIUS	THICKNESS	GLASSES	REFRACTIVE INDEX 193.304 nm	½ FREE DIAMETER
0	0.000000000	32.000000000	L710	0.99998200	56.080
1	0.000000000	0.000000000	L710	0.99998200	63.102
2	225.350754363AS	10.000000000	SIO2HL	1.56028895	65.569
3	205.452906258	16.699011276	HE193	0.99971200	65.485
4	−485.968436889AS	10.000000000	SIO2HL	1.56028895	65.851
5	236.120586098	35.991435570	HE193	0.99971200	69.716
6	−118.383252950	35.248541973	SIO2HL	1.56028895	70.715
7	−199.283119032	1.000000000	HE193	0.99971200	91.711
8	−297.219107904	20.818099956	SIO2HL	1.56028895	96.216
9	−242.015290785	1.012986192	HE193	0.99971200	103.186
10	−8025.596542346	34.642805711	SIO2HL	1.56028895	115.500
11	−527.541918500	1.061404340	HE193	0.99971200	122.264
12	2846.863909159	47.490572144	SIO2HL	1.56028895	129.024
13	−281.527506472	1.000000000	HE193	0.99971200	131.520
14	720.498316615	25.197751101	SIO2HL	1.56028895	133.348
15	−1864.287720284	1.000000000	HE193	0.99971200	133.010
16	297.151930333	51.479599832	SIO2HL	1.56028895	129.235
17	2167.873564789	1.204618080	HE193	0.99971200	123.220
18	188.319913743	55.000000000	SIO2HL	1.56028895	111.397
19	108.153510038	15.971910183	HE193	0.99971200	83.783
20	148.002390368	55.000000000	SIO2HL	1.56028895	83.477
21	190.335908124	13.500103985	HE193	0.99971200	69.512
22	1443.253928436	24.323718717	SIO2HL	1.56028895	68.921
23	199.695044391AS	37.573461703	HE193	0.99971200	62.387
24	−111.551299373	10.000000000	SIO2HL	1.56028895	60.784
25	239.358614085	27.666487186	HE193	0.99971200	65.748
26	−142.880130573	41.866297159	SIO2HL	1.56028895	66.580
27	−189.902057474	1.589605652	HE193	0.99971200	84.173
28	−748.290216502AS	29.582545265	SIO2HL	1.56028895	90.858
29	−233.966894232	8.147720844	HE193	0.99971200	95.596
30	522.113109615	10.822356285	SIO2HL	1.56028895	105.238
31	222.998461180	27.042016978	HE193	0.99971200	107.333
32	2251.467600263	35.217263658	SIO2HL	1.56028895	108.549

TABLE 3-continued

33	−318.234735893	15.214352753	HE193	0.99971200	112.335
34	299.639863140	37.156335602	SIO2HL	1.56028895	130.529
35	1065.209248614AS	29.625427714	HE193	0.99971200	130.316
36	0.000000000	22.504097096	HE193	0.99971200	131.300
37	354.298294212	22.700275111	SIO2HL	1.56028895	139.703
38	238.221108961	17.302866825	HE193	0.99971200	137.684
39	350.361961049	48.201285092	SIO2HL	1.56028895	138.456
40	−830.182582275AS	8.553043233	HE193	0.99971200	138.929
41	451.152609432	53.706250069	SIO2HL	1.56028895	138.872
42	−529.782985076	2.080488115	HE193	0.99971200	137.286
43	131.667284180	50.882399067	SIO2HL	1.56028895	108.852
44	197.437143555	1.961444642	HE193	0.99971200	96.477
45	128.459992965	50.613576955	SIO2HL	1.56028895	87.931
46	248.183667913	8.856875224	HE193	0.99971200	67.641
47	466.791868973AS	40.667719468	SIO2HL	1.56028895	63.096
48	942.984808834	2.803249134	HE193	0.99971200	37.242
49	0.000000000	10.000000000	SIO2HL	1.56028895	33.823
50	0.000000000	8.020000000	L710	0.99998200	27.268
51	0.000000000	0.000000000		1.00000000	14.021

ASPHERIC CONSTANTS

SURFACE NR. 2

K	0.0000
C1	9.00497722e−008
C2	−2.96761245e−012
C3	2.42426411e−016
C4	−1.29024008e−020
C5	−2.03172826e−024
C6	5.50185705e−028
C7	−3.89197744e−032
C8	0.00000000e+000
C9	0.00000000e+000

SURFACE NR. 4

K	0.0000
C1	3.65969250e−008
C2	−1.92473151e−012
C3	−1.32665803e−016
C4	5.69164703e−021
C5	1.31041719e−024
C6	−1.53054324e−028
C7	9.97324868e−033
C8	0.00000000e+000
C9	0.00000000e+000

SURFACE NR. 23

K	0.0000
C1	−1.27989150e−008
C2	−3.88749373e−012
C3	−2.51584504e−016
C4	−8.45723879e−021
C5	−7.11343179e−024
C6	1.64378151e−027
C7	−2.17615886e−031
C8	0.00000000e+000
C9	0.00000000e+000

SURFACE NR. 28

K	0.0000
C1	−1.03153490e−008
C2	6.25910971e−013
C3	5.45981131e−018
C4	9.75498051e−022
C5	−1.22736867e−025
C6	1.17406737e−029
C7	−5.81094482e−034
C8	0.00000000e+000
C9	0.00000000e+000

SURFACE NR. 35

K	0.0000
C1	5.28759000e−010
C2	1.51806496e−014
C3	−1.87647477e−018
C4	−1.08308029e−023
C5	−9.74605211e−028
C6	6.03242407e−032

TABLE 3-continued

C7	−5.09796873e−037
C8	0.00000000e+000
C9	0.00000000e+000
SURFACE NR. 40	
K	0.0000
C1	1.83813349e−010
C2	3.19321009e−015
C3	2.04249906e−019
C4	6.57531812e−024
C5	−2.09352644e−028
C6	1.60987553e−033
C7	−2.90466412e−037
C8	0.00000000e+000
C9	0.00000000e+000
SURFACE NR. 47	
K	0.0000
C1	−3.99800644e−008
C2	4.05930779e−012
C3	1.42362123e−016
C4	−3.12437665e−020
C5	−5.49454012e−024
C6	1.84641101e−027
C7	−1.54565739e−031
C8	0.00000000e+000
C9	0.00000000e+000

TABLE 3a

Surface	SINImax	Imax [deg]
0		
1	0.218	12.59
2	0.5596	34.03
3	0.488	29.21
4	0.3003	17.48
5	0.692	43.79
6	0.4085	24.11
7	0.2147	12.40
8	0.222	12.83
9	0.2023	11.67
10	0.459	27.32
11	0.1467	8.44
12	0.3916	23.05
13	0.4332	25.67
14	0.2266	13.10
15	0.22	12.71
16	0.3403	19.90
17	0.2733	15.86
18	0.2988	17.39
19	0.6767	42.59
20	0.4381	25.98
21	0.3087	17.98
22	0.3104	18.08
23	0.3781	22.22
24	0.6747	42.43
25	0.6352	39.43
26	0.2639	15.30
27	0.2167	12.52
28	0.4209	24.89
29	0.1783	10.27
30	0.521	31.40

TABLE 3a-continued

Surface	SINImax	Imax [deg]
31	0.8704	60.51
32	0.6151	37.96
33	0.0764	4.38
34	0.7263	46.58
35	0.2744	15.93
36	0.1613	9.28
37	0.5276	31.84
38	0.8146	54.55
39	0.682	43.00
40	0.2792	16.21
41	0.2977	17.32
42	0.6416	39.91
43	0.5727	34.94
44	0.2767	16.06
45	0.1175	6.75
46	0.7045	44.79
47	0.7818	51.43
48	0.8659	59.99
49	0.8721	60.70
50	0.8721	60.70
51	0.8721	60.70

TABLE 4

SURFACE	RADIUS	THICKNESS	GLASSES	REFRACTIVE INDEX 157.6 nm	½ FREE DIAMETER
0	0.000000000	29.091200000	N2	1.00000300	46.170
1	0.000000000	0.050360271	N2	1.00000300	52.536
2	−27403.121890329	6.400000000	CAF2HL	1.55848720	52.536

TABLE 4-continued

3	128.789046652	8.167826938	N2	1.00000300	55.162
4	464.481828994AS	6.543292509	CAF2HL	1.55848720	56.851
5	250.689303807	19.604013184	N2	1.00000300	58.208
6	−223.266447510AS	50.327605169	CAF2HL	1.55848720	59.504
7	−141.012345914	0.896857450	N2	1.00000300	77.821
8	−492.125790935	39.701273305	CAF2HL	1.55848720	84.708
9	−185.333140083	1.620061449	N2	1.00000300	91.930
10	−4917.002616489AS	36.075373094	CAF2HL	1.55848720	96.618
11	−224.975412381	17.499455417	N2	1.00000300	98.628
12	−249.735183706	31.779981213	CAF2HL	1.55848720	97.516
13	−169.147720350	1.273004772	N2	1.00000300	99.721
14	131.492053134	36.312876809	CAF2HL	1.55848720	83.706
15	1183.761281348	0.820000000	N2	1.00000300	79.822
16	446.400836562	6.793752445	CAF2HL	1.55848720	76.456
17	80.708201634	6.438487413	N2	1.00000300	62.135
18	88.076542641	28.609450919	CAF2HL	1.55848720	61.689
19	103.290384365	24.140118330	N2	1.00000300	53.717
20	−214.410142174	6.400000000	CAF2HL	1.55848720	52.881
21	166.705978193AS	25.336749078	N2	1.00000300	50.734
22	−86.759432429	6.718880984	CAF2HL	1.55848720	50.602
23	−895.255217870	20.208808365	N2	1.00000300	55.126
24	−94.182592644	7.167405034	CAF2HL	1.55848720	56.136
25	−199.256306511	6.787427649	N2	1.00000300	63.043
26	−257.348011065	42.358250101	CAF2HL	1.55848720	67.198
27	−158.070327885	0.915908375	N2	1.00000300	79.706
28	−536.887928001	21.844348944	CAF2HL	1.55848720	84.997
29	−205.950312449	2.162149307	N2	1.00000300	87.472
30	−1845.287959821AS	27.220459982	CAF2HL	1.55848720	90.588
31	−211.608710551	29.606451754	N2	1.00000300	91.877
32	−183.434679441	7.418912892	CAF2HL	1.55848720	90.562
33	240.988713790	8.623094130	N2	1.00000300	99.368
34	286.816486745	50.566486028	CAF2HL	1.55848720	104.285
35	−278.974234663	3.401812568	N2	1.00000300	106.263
36	272.985081433	35.883815357	CAF2HL	1.55848720	110.387
37	−1204.561658666AS	29.820606892	N2	1.00000300	109.520
38	−205.963439341	9.589085190	CAF2HL	1.55848720	108.972
39	−486.467956109	23.105163626	N2	1.00000300	111.820
40	0.000000000	−10.633177329	N2	1.00000300	113.000
41	520.246306609AS	6.400000000	CAF2HL	1.55848720	113.282
42	210.835739690	9.380949546	N2	1.00000300	113.819
43	249.610235127	72.661056858	CAF2HL	1.55848720	116.283
44	−368.944153695	27.617582877	N2	1.00000300	118.001
45	194.602406707AS	40.994994726	CAF2HL	1.55848720	111.496
46	2325.171902613	0.959912478	N2	1.00000300	108.992
47	120.131289340	32.489921154	CAF2HL	1.55848720	91.646
48	219.061234205	4.330384877	N2	1.00000300	86.556
49	148.308513415	23.818571196	CAF2HL	1.55848720	79.114
50	203.105155430	0.826871809	N2	1.00000300	69.446
51	136.769195322	19.729069306	CAF2HL	1.55848720	64.538
52	210.657871509	6.502120434	N2	1.00000300	55.515
53	376.287223054	15.336785456	CAF2HL	1.55848720	51.778
54	183.572236231	4.060877180	N2	1.00000300	40.084
55	181.243374040	16.948210271	CAF2HL	1.55848720	36.115
56	426.075165306	1.398093981	N2	1.00000300	26.107
57	0.000000000	2.400024000	CAF2HL	1.55848720	25.121
58	0.000000000	7.272800000	N2	1.00000300	23.545
59	0.000000000	0.000000000	N2	1.00000300	11.543
60	0.000000000	0.000000000		1.00000000	11.543

ASPHERIC CONSTANTS

SURFACE NR. 4

K	0.0000
C1	3.68947301e−007
C2	−2.07010320e−011
C3	1.80448893e−015
C4	−2.02024724e−019
C5	1.06591750e−023
C6	8.66812157e−027
C7	−1.28036020e−030
C8	0.00000000e+000
C9	0.00000000e+000

SURFACE NR. 6

K	0.0000
C1	−1.90456699e−007
C2	7.09276542e−012
C3	−9.42039479e−016

TABLE 4-continued

C4	9.60030375e−020
C5	−4.81313543e−023
C6	1.26016542e−026
C7	−2.12906900e−030
C8	0.00000000e+000
C9	0.00000000e+000
SURFACE NR. 10	
K	0.0000
C1	1.24881874e−009
C2	−7.54632592e−013
C3	9.59548418e−018
C4	3.61424148e−022
C5	4.66204361e−026
C6	−5.18069760e−030
C7	6.76055535e−035
C8	0.00000000e+000
C9	0.00000000e+000
SURFACE NR. 21	
K	0.0000
C1	−1.78468549e−007
C2	−5.04642691e−012
C3	−9.31857452e−016
C4	2.41285214e−019
C5	−1.68512636e−022
C6	5.20287108e−026
C7	−7.17032999e−030
C8	0.00000000e+000
C9	0.00000000e+000
SURFACE NR. 30	
K	0.0000
C1	−1.34161725e−008
C2	8.16970893e−014
C3	−3.14061744e−018
C4	1.03237892e−021
C5	−1.84717130e−025
C6	1.87170281e−029
C7	−7.93751880e−034
C8	0.00000000e+000
C9	0.00000000e+000
SURFACE NR. 37	
K	0.0000
C1	7.99945890e−009
C2	−1.42636834e−013
C3	−2.69989142e−019
C4	−5.15246689e−023
C5	−4.83470243e−027
C6	2.58478622e−031
C7	−7.74164486e−036
C8	0.00000000e+000
C9	0.00000000e+000
SURFACE NR. 41	
K	0.0000
C1	−4.43364674e−009
C2	1.10741132e−014
C3	3.55153523e−018
C4	−4.85210428e−024
C5	2.35336826e−027
C6	−1.03253172e−031
C7	4.79327883e−036
C8	0.00000000e+000
C9	0.00000000e+000
SURFACE NR. 45	
K	0.0000
C1	−1.18399241e−009
C2	−1.58492270e−013
C3	−1.27975554e−018
C4	−1.10519991e−022
C5	2.24373710e−027
C6	−9.77335519e−032
C7	−5.74659204e−036
C8	0.00000000e+000
C9	0.00000000e+000

TABLE 4a

surface	SINImax	Imax [deg]
0		
1	0.218	12.59
2	0.2161	12.48
3	0.8614	59.47
4	0.7973	52.87
5	0.6657	41.74
6	0.2409	13.94
7	0.3638	21.33
8	0.2152	12.43
9	0.3613	21.18
10	0.1713	9.86
11	0.4861	29.08
12	0.4386	26.01
13	0.7713	50.47
14	0.4394	26.07
15	0.5238	31.59
16	0.4299	25.46
17	0.6585	41.19
18	0.5754	35.13
19	0.2938	17.09
20	0.5461	33.10
21	0.3959	23.32
22	0.6334	39.30
23	0.4332	25.67
24	0.3413	19.96
25	0.3862	22.72
26	0.4018	23.69
27	0.2041	11.78
28	0.3328	19.44
29	0.2731	15.85
30	0.2821	16.39
31	0.4873	29.16
32	0.5471	33.17
33	0.9026	64.50
34	0.8765	61.22
35	0.3044	17.72
36	0.5741	35.04

TABLE 4a-continued

surface	SINImax	Imax [deg]
37	0.2652	15.38
38	0.7108	45.30
39	0.2008	11.58
40	0.1463	8.41
41	0.3362	19.65
42	0.8413	57.28
43	0.7932	52.49
44	0.5042	30.28
45	0.4773	28.51
46	0.4358	25.84
47	0.4411	26.17
48	0.3751	22.03
49	0.2544	14.74
50	0.545	33.02
51	0.4465	26.52
52	0.7277	46.69
53	0.7944	52.60
54	0.7452	48.18
55	0.7614	49.59
56	0.877	61.28
57	0.8838	62.10
58	0.8853	62.29
59	0.8838	62.10
60	0.8838	62.10

TABLE 5

SURFACE	RADIUS	THICKNESS	GLASSES	REFRACTIVE INDEX 193.304 nm	½ FREE DIAMETER
0	0.000000000	32.000000000	LUFTV193	1.00030168	56.080
1	0.000000000	0.000000000	LUFTV193	1.00030168	63.258
2	−1268.338705527AS	11.478260873	SIO2V	1.56078570	63.258
3	267.538117540	9.451447213	N2VP950	1.00029966	65.916
4	600.021131212AS	11.500000000	SIO2V	1.56078570	67.578
5	326.741991833	28.091498045	N2VP950	1.00029966	70.893
6	−170.788507842	51.999135922	SIO2V	1.56078570	72.910
7	−330.329053389	1.000000000	N2VP950	1.00029966	99.226
8	−1068.525517497	19.979625145	SIO2V	1.56078570	105.942
9	−387.645501150	1.000000000	N2VP950	1.00029966	109.709
10	−704.568730532AS	42.420550373	SIO2V	1.56078570	113.373
11	−222.016287024	1.000000000	N2VP950	1.00029966	119.118
12	1941.257887377	52.000000000	SIO2V	1.56078570	126.942
13	−469.372066662	3.397916884	N2VP950	1.00029966	129.896
14	−4169.926875111	52.000000000	SIO2V	1.56078570	129.822
15	−295.686690038	1.000000000	N2VP950	1.00029966	130.032
16	159.750938231	51.964442356	SIO2V	1.56078570	108.529
17	376.268786269	1.000000000	N2VP950	1.00029966	97.568
18	307.447954470	51.969227450	SIO2V	1.56078570	95.447
19	116.498974152	31.898186858	N2VP950	1.00029966	65.905
20	−288.097826092	11.500000000	SIO2V	1.56078570	64.079
21	336.397895010AS	37.099202165	N2VP950	1.00029966	60.053
22	−106.320408238	11.500000000	SIO2V	1.56078570	58.050
23	187.789793825	26.304322413	N2VP950	1.00029966	63.753
24	−209.237460909	43.406094751	SIO2V	1.56078570	66.044
25	−216.929048076	1.000000000	N2VP950	1.00029966	82.840
26	1164.410193579AS	23.567441112	SIO2V	1.56078570	92.682
27	−329.001203575	1.000000000	N2VP950	1.00029966	94.132
28	2521.852603301	17.217391310	SIO2V	1.56078570	97.558
29	228.980652217	28.589394523	N2VP950	1.00029966	102.117

TABLE 5-continued

30	27241.479244975	36.454077888	SIO2V	1.56078570	105.084
31	−230.122916051	2.961510546	N2VP950	1.00029966	108.362
32	270.925118464	38.714553103	SIO2V	1.56078570	124.500
33	763.688485160AS	35.762711758	N2VP950	1.00029966	123.913
34	0.000000000	10.298384083	N2VP950	1.00029966	124.951
35	305.539519440	25.677979598	SIO2V	1.56078570	131.506
36	216.211099364	24.769069040	N2VP950	1.00029966	128.830
37	382.860100127	50.973600009	SIO2V	1.56078570	130.799
38	−694.560467360AS	5.723480057	N2VP950	1.00029966	131.956
39	325.403745866	49.444778918	SIO2V	1.56078570	131.961
40	−731.949523671	1.000000000	N2VP950	1.00029966	130.439
41	129.520874552	46.268119852	SIO2V	1.56078570	105.425
42	252.827890722	1.000000000	N2VP950	1.00029966	97.727
43	136.184798222	47.793960778	SIO2V	1.56078570	87.092
44	291.218349738	8.959947251	N2VP950	1.00029966	67.069
45	1284.867832510AS	36.652815450	SIO2V	1.56078570	62.759
46	1021.772390757	3.210870937	N2VP950	1.00029966	38.108
47	0.000000000	10.000000000	SIO2V	1.56078570	33.939
48	0.000000000	8.000000000	LUFTV193	1.00030168	27.360
49	0.000000000	0.000000000		1.00000000	14.020

ASPHERIC CONSTANTS

SURFACE NR. 2

K	0.0000
C1	1.67561866e−007
C2	−2.12938922e−011
C3	1.69680309e−015
C4	−1.98132595e−019
C5	7.57848219e−024
C6	−1.91694592e−028
C7	7.31348529e−034
C8	0.00000000e+000
C9	0.00000000e+000

SURFACE NR. 4

K	0.0000
C1	−7.60044675e−008
C2	1.17354453e−011
C3	−1.30436139e−015
C4	1.52774359e−019
C5	−6.11275102e−024
C6	2.17798015e−028
C7	−4.32254321e−033
C8	0.00000000e+000
C9	0.00000000e+000

SURFACE NR. 10

K	0.0000
C1	−1.34208180e−009
C2	2.87384909e−013
C3	−2.97929643e−018
C4	−1.89342955e−022
C5	−5.11583717e−027
C6	1.55819935e−031
C7	−1.40446770e−038
C8	0.00000000e+000
C9	0.00000000e+000

SURFACE NR. 21

K	0.0000
C1	1.83877356e−008
C2	2.86899242e−012
C3	3.19518028e−017
C4	−7.19052986e−020
C5	1.13466451e−023
C6	−1.77192399e−027
C7	−1.01670692e−031
C8	0.00000000e+000
C9	0.00000000e+000

SURFACE NR. 26

K	0.0000
C1	−1.01472536e−008
C2	1.33731219e−012
C3	−5.43150945e−018
C4	4.71557114e−023
C5	−6.64341291e−026

TABLE 5-continued

C6	−3.91519696e−031
C7	6.16634038e−035
C8	0.00000000e+000
C9	0.00000000e+000
SURFACE NR. 33	
K	0.0000
C1	2.13285827e−009
C2	−5.84623813e−014
C3	−1.42317238e−018
C4	1.10894118e−023
C5	−1.75615181e−027
C6	1.54014495e−031
C7	−3.58350869e−036
C8	0.00000000e+000
C9	0.00000000e+000
SURFACE NR. 38	
K	0.0000
C1	−4.16611922e−009
C2	4.28615353e−014
C3	−6.79159744e−019
C4	−2.60455674e−023
C5	1.06709496e−027
C6	−7.04980983e−032
C7	3.97315562e−037
C8	0.00000000e+000
C9	0.00000000e+000
SURFACE NR. 45	
K	0.0000
C1	−1.10987995e−008
C2	6.74554563e−012
C3	−6.08182492e−016
C4	2.40267725e−020
C5	−2.12867221e−024
C6	6.08391245e−028
C7	−5.81691443e−032
C8	0.00000000e+000
C9	0.00000000e+000

TABLE 6

SURFACE	RADIUS	THICKNESS	GLASSES	REFRACTIVE INDEX 193.304 nm	½ FREE DIAMETER
0	0.000000000	31.000000000	L710	0.99998200	56.080
1	0.000000000	1.000000000	HE193	0.99971200	62.856
2	324.818247939AS	8.109025357	SIO2HL	1.56028895	64.646
3	219.117611826	5.509660348	HE193	0.99971200	65.135
4	289.200300616AS	7.000000000	SIO2HL	1.56028895	66.381
5	227.856104705	17.243048254	HE193	0.99971200	66.734
6	−377.649070374	7.000000000	SIO2HL	1.56028895	67.059
7	387.641770903	30.796463985	HE193	0.99971200	71.597
8	−125.714248975	54.975207900	SIO2HL	1.56028895	72.277
9	−176.955529980	1.000000000	HE193	0.99971200	100.007
10	−1297.534896140	31.636302227	SIO2HL	1.56028895	114.600
11	−320.961128376	1.000000000	HE193	0.99971200	119.511
12	936.880173082	44.820142873	SIO2HL	1.56028895	130.745
13	−328.618771838	3.088384233	HE193	0.99971200	131.968
14	317.146646669	32.169396486	SIO2HL	1.56028895	131.861
15	1880.972057190	78.800003484	HE193	0.99971200	130.569
16	778.616134901	21.855706412	SIO2HL	1.56028895	112.867
17	−1344.892951770	2.120584882	HE193	0.99971200	111.151
18	184.194583638	26.864832492	SIO2HL	1.56028895	98.404
19	117.923993472	8.944323916	HE193	0.99971200	83.450
20	122.599592610	50.092138884	SIO2HL	1.56028895	82.216
21	123.591716800	52.677842672	HE193	0.99971200	66.129
22	−133.413687632	7.000000000	SIO2HL	1.56028895	59.894
23	201.636820203	31.091699285	HE193	0.99971200	59.866
24	−117.122170355	22.371886041	SIO2HL	1.56028895	60.770
25	271.237822926	18.190270939	HE193	0.99971200	77.184
26	−828.307583707	23.724292231	SIO2HL	1.56028895	80.324
27	−217.730531706	1.629365175	HE193	0.99971200	86.028
28	24863.715253700	23.891029762	SIO2HL	1.56028895	99.050

TABLE 6-continued

29	−340.154546232	1.000000000	HE193	0.99971200	102.080
30	499.177180862	33.230036742	SIO2HL	1.56028895	114.528
31	−613.861853920	4.746303203	HE193	0.99971200	115.894
32	−515.657687359AS	7.000000000	SIO2HL	1.56028895	116.027
33	−2799.133265700	28.850953586	HE193	0.99971200	119.520
34	−374.801866679	25.903304270	SIO2HL	1.56028895	122.380
35	−229.064488423	3.130798012	HE193	0.99971200	125.091
36	0.000000000	4.590309473	HE193	0.99971200	129.531
37	0.000000000	−1.761443244	HE193	0.99971200	129.976
38	480.603781326	23.812586743	SIO2HL	1.56028895	134.088
39	259.375898088	8.237844188	HE193	0.99971200	135.910
40	312.231631384	55.513942588	SIO2HL	1.56028895	136.609
41	−596.581070286	4.943886708	HE193	0.99971200	137.420
42	371.538894387	38.328387113	SIO2HL	1.56028895	138.683
43	−20570.555487000AS	2.057897803	HE193	0.99971200	137.171
44	186.804638892	55.000000000	SIO2HL	1.56028895	127.714
45	371.539070225	13.149085685	HE193	0.99971200	117.755
46	136.294111489	54.999981718	SIO2HL	1.56028895	99.988
47	527.773767013AS	1.000000000	HE193	0.99971200	86.981
48	170.379719961	35.449588232	SIO2HL	1.56028895	76.078
49	292.013444451AS	7.226713258	HE193	0.99971200	57.583
50	0.000000000	27.238216082	CAF2HL	1.50143563	54.452
51	0.000000000	1.500000000	HE193	0.99971200	35.406
52	0.000000000	10.000000000	SIO2HL	1.56028895	32.871
53	0.000000000	7.250000000	L710	0.99998200	26.261
54	0.000000000	0.000000000		1.00000000	14.020

ASPHERIC CONSTANTS

SURFACE NR. 2

K	−1.8845
C1	5.29821153e−008
C2	−4.43279002e−012
C3	1.28707472e−015
C4	−2.39343289e−019
C5	1.99234178e−023
C6	2.46399483e−027
C7	−4.33709316e−031
C8	0.00000000e+000
C9	0.00000000e+000

SURFACE NR. 4

K	0.1824
C1	7.99717816e−008
C2	3.44235754e−013
C3	−1.08433322e−015
C4	2.49428499e−019
C5	−4.04263889e−023
C6	2.92251162e−027
C7	−2.35276355e−032
C8	0.00000000e+000
C9	0.00000000e+000

SURFACE NR. 32

K	0.0000
C1	−1.27754362e−008
C2	3.02764844e−013
C3	1.00750526e−018
C4	−6.13679336e−023
C5	4.38665224e−027
C6	−3.40250286e−031
C7	1.46968938e−035
C8	0.00000000e+000
C9	0.00000000e+000

SURFACE NR. 43

K	0.0000
C1	1.57685663e−009
C2	1.02156359e−013
C3	−1.70007813e−018
C4	−2.26737767e−023
C5	2.28492082e−027
C6	−1.04091200e−031
C7	2.34019985e−036
C8	0.00000000e+000
C9	0.00000000e+000

TABLE 6-continued

SURFACE NR. 47	
K	6.8784
C1	1.53142434e−008
C2	−3.32257012e−013
C3	8.40396973e−017
C4	−1.22248965e−020
C5	1.29284065e−024
C6	−8.69096802e−029
C7	1.99745782e−033
C8	0.00000000e+000
C9	0.00000000e+000
SURFACE NR. 49	
K	0.0000
C1	−2.17885424e−008
C2	−4.43299434e−013
C3	−1.44194471e−015
C4	2.99216702e−019
C5	−8.06687258e−023
C6	1.77963946e−026
C7	−1.41052000e−030
C8	0.00000000e+000
C9	0.00000000e+000

TABLE 6a

Surface	SINImax	Imax [deg]
0		
1	0.219	12.65
2	0.4466	26.53
3	0.5367	32.46
4	0.5376	32.52
5	0.5296	31.98
6	0.2882	16.75
7	0.6327	39.25
8	0.3718	21.83
9	0.267	15.49
10	0.4034	23.79
11	0.2126	12.27
12	0.4555	27.10
13	0.4051	23.90
14	0.4202	24.85
15	0.2164	12.50
16	0.2138	12.35
17	0.42	24.83
18	0.2187	12.63
19	0.5589	33.98
20	0.5152	31.01
21	0.3269	19.08
22	0.7092	45.17
23	0.5457	33.07
24	0.3583	21.00
25	0.9082	65.26
26	0.7085	45.11
27	0.3348	19.56
28	0.6244	38.64
29	0.2345	13.56
30	0.6387	39.69
31	0.0877	5.03
32	0.1301	7.48

TABLE 6a-continued

Surface	SINImax	Imax [deg]
33	0.323	18.84
34	0.0718	4.12
35	0.4628	27.57
36	0.2345	13.56
37	0.2345	13.56
38	0.4873	29.16
39	0.8491	58.11
40	0.7965	52.80
41	0.328	19.15
42	0.3866	22.74
43	0.274	15.90
44	0.5254	31.70
45	0.2422	14.02
46	0.3632	21.30
47	0.6501	40.55
48	0.4858	29.06
49	0.8107	54.16
50	0.8759	61.15
51	0.8759	61.15
52	0.8759	61.15
53	0.8759	61.15
54	0.8759	61.15

TABLE 7

SURFACE	RADIUS	THICKNESS	GLASSES	REFRACTIVE INDEX 193.304 nm	½ FREE DIAMETER
0	0.000000000	31.000000000	L710	0.99998200	56.080
1	0.000000000	1.000000000	HE193	0.99971200	62.856
2	324.818247939AS	8.109025357	SIO2HL	1.56028895	64.646
3	219.117611826	5.508087220	HE193	0.99971200	65.135

TABLE 7-continued

4	289.200300616AS	7.000000000	SIO2HL	1.56028895	66.381
5	227.856104705	17.243070148	HE193	0.99971200	66.734
6	−377.649070374	7.000000000	SIO2HL	1.56028895	67.059
7	387.641770903	30.765544016	HE193	0.99971200	71.598
8	−125.714248975	54.975207900	SIO2HL	1.56028895	72.265
9	−176.955529980	1.000000000	HE193	0.99971200	99.993
10	−1297.534896140	31.636302227	SIO2HL	1.56028895	114.582
11	−320.961128376	1.000000000	HE193	0.99971200	119.494
12	936.880173082	44.820142873	SIO2HL	1.56028895	130.726
13	−328.618771838	3.492277374	HE193	0.99971200	131.951
14	317.146646669	32.169396486	SIO2HL	1.56028895	131.848
15	1880.972057190	78.466159550	HE193	0.99971200	130.555
16	778.616134901	21.855706412	SIO2HL	1.56028895	112.930
17	−1344.892951770	1.631223556	HE193	0.99971200	111.218
18	184.194583638	26.864832492	SIO2HL	1.56028895	98.601
19	117.923993472	8.738538132	HE193	0.99971200	83.612
20	122.599592610	50.092138884	SIO2HL	1.56028895	82.419
21	123.591716800	53.386697866	HE193	0.99971200	66.332
22	−133.413687632	7.000000000	SIO2HL	1.56028895	59.919
23	201.636820203	31.123951016	HE193	0.99971200	59.900
24	−117.122170355	22.371886041	SIO2HL	1.56028895	60.806
25	271.237822926	18.548517752	HE193	0.99971200	77.260
26	−828.307583707	23.724292231	SIO2HL	1.56028895	80.717
27	−217.730531706	1.000000000	HE193	0.99971200	86.373
28	24863.715253700	23.891029762	SIO2HL	1.56028895	99.099
29	−340.154546232	1.000000000	HE193	0.99971200	102.128
30	499.177180862	33.230036742	SIO2HL	1.56028895	114.615
31	−613.861853920	4.746303203	HE193	0.99971200	115.978
32	−515.657687359AS	7.000000000	SIO2HL	1.56028895	116.111
33	−2799.133265700	28.850953586	HE193	0.99971200	119.614
34	−374.801866679	25.903304270	SIO2HL	1.56028895	122.472
35	−229.064488423	3.130798012	HE193	0.99971200	125.181
36	0.000000000	5.173121288	HE193	0.99971200	129.642
37	0.000000000	1.000000000	HE193	0.99971200	130.135
38	474.346153969	24.214285976	SIO2HL	1.56028895	134.997
39	257.158432536	8.053951335	HE193	0.99971200	136.742
40	306.376423539	57.804293441	SIO2HL	1.56028895	137.456
41	−562.895510400	1.000000000	HE193	0.99971200	138.239
42	372.293287787	33.212051475	SIO2HL	1.56028895	138.770
43	12328.532325400AS	1.106587587	HE193	0.99971200	137.675
44	193.144605329	54.576878288	SIO2HL	1.56028895	128.685
45	379.786426378	16.773776607	HE193	0.99971200	118.623
46	134.855937913	55.000000000	SIO2HL	1.56028895	99.496
47	536.515306116AS	1.080464261	HE193	0.99971200	86.795
48	173.206435013	35.323967088	SIO2HL	1.56028895	76.056
49	299.060830919AS	6.563458346	HE193	0.99971200	57.738
50	0.000000000	28.341741198	SIO2HL	1.56028895	55.402
51	0.000000000	1.500000000	HE193	0.99971200	36.669
52	0.000000000	10.000000000	SIO2HL	1.56028895	34.134
53	0.000000000	7.999999986	L710	0.99998200	27.525
54	0.000000000	0.000000000		1.00000000	14.020

ASPHERIC CONSTANTS

SURFACE NR. 2

K	−1.8845
C1	5.29821153e−008
C2	−4.43279002e−012
C3	1.28707472e−015
C4	−2.39343289e−019
C5	1.99234178e−023
C6	2.46399483e−027
C7	−4.33709316e−031
C8	0.00000000e+000
C9	0.00000000e+000

SURFACE NR. 4

K	0.1824
C1	7.99717816e−008
C2	3.44235754e−013
C3	−1.08433322e−015
C4	2.49428499e−019
C5	−4.04263889e−023
C6	2.92251162e−027
C7	−2.35276355e−032
C8	0.00000000e+000
C9	0.00000000e+000

TABLE 7-continued

SURFACE NR. 32	
K	0.0000
C1	−1.27754362e−008
C2	3.02764844e−013
C3	1.00750526e−018
C4	−6.13679336e−023
C5	4.38665224e−027
C6	−3.40250286e−031
C7	1.46968938e−035
C8	0.00000000e+000
C9	0.00000000e+000
SURFACE NR. 43	
K	0.0000
C1	1.36549730e−009
C2	1.02306815e−013
C3	−1.35739896e−018
C4	−1.99345093e−023
C5	1.59224599e−027
C6	−6.75882258e−032
C7	1.39559460e−036
C8	0.00000000e+000
C9	0.00000000e+000
SURFACE NR. 47	
K	7.2953
C1	1.61057750e−008
C2	−5.05815963e−013
C3	8.84032736e−017
C4	−1.11981147e−020
C5	1.14085256e−024
C6	−7.43387672e−029
C7	1.41113763e−033
C8	0.00000000e+000
C9	0.00000000e+000
SURFACE NR. 49	
K	0.0000
C1	−3.00219975e−008
C2	−1.20927625e−013
C3	−1.49865939e−015
C4	3.27847128e−019
C5	−9.19939235e−023
C6	2.08807060e−026
C7	−1.71435366e−030
C8	0.00000000e+000
C9	0.00000000e+000

TABLE 7a

Surface	SINImax	Imax [deg]
0		
1	0.219	12.65
2	0.4466	26.53
3	0.5367	32.46
4	0.5376	32.52
5	0.5296	31.98
6	0.2882	16.75
7	0.6327	39.25
8	0.3718	21.83
9	0.267	15.49
10	0.4034	23.79
11	0.2126	12.27
12	0.4555	27.10
13	0.405	23.89
14	0.4202	24.85
15	0.2164	12.50
16	0.2137	12.34
17	0.4201	24.84
18	0.22	12.71
19	0.561	34.12
20	0.5177	31.18
21	0.3253	18.98

TABLE 7a-continued

Surface	SINImax	Imax [deg]
22	0.7092	45.17
23	0.5458	33.08
24	0.3582	20.99
25	0.9092	65.40
26	0.7085	45.11
27	0.3328	19.44
28	0.6241	38.62
29	0.2343	13.55
30	0.6385	39.68
31	0.0876	5.03
32	0.1299	7.46
33	0.3229	18.84
34	0.0715	4.10
35	0.463	27.58
36	0.2344	13.56
37	0.2344	13.56
38	0.4921	29.48
39	0.8574	59.03
40	0.8079	53.89
41	0.3555	20.82
42	0.373	21.90
43	0.2616	15.17

TABLE 7a-continued

Surface	SINImax	Imax [deg]
44	0.503	30.20
45	0.2398	13.87
46	0.377	22.15
47	0.6524	40.72
48	0.492	29.47
49	0.8135	54.44
50	0.876	61.16

TABLE 7a-continued

Surface	SINImax	Imax [deg]
51	0.876	61.16
52	0.876	61.16
53	0.876	61.16
54	0.876	61.16

TABLE 8

SURFACE	RADIUS	THICKNESS	GLASSES	REFRACTIVE INDEX 193.304 nm	½ FREE DIAMETER
0	0.000000000	34.598670703	LUFTV193	1.00030168	56.080
1	0.000000000	5.480144837	LUFTV193	1.00030168	64.122
2	6478.659586000AS	10.843585909	SIO2V	1.56078570	65.807
3	−1354.203087320	2.423172128	N2VP950	1.00029966	66.705
4	−1087.803716660	9.621961389	SIO2V	1.56078570	67.029
5	183.366808766	2.746190506	N2VP950	1.00029966	70.249
6	206.367008633AS	8.085673658	SIO2V	1.56078570	71.462
7	193.387116101	36.794320510	N2VP950	1.00029966	72.483
8	−140.799169619	50.095071588	SIO2V	1.56078570	73.484
9	−373.463518266	1.000056376	N2VP950	1.00029966	103.736
10	−561.452806488	22.561578822	SIO2V	1.56078570	107.508
11	−263.612680429	1.000756794	N2VP950	1.00029966	111.562
12	−49392.564837400AS	53.841314203	SIO2V	1.56078570	124.515
13	−266.359005048	15.247580669	N2VP950	1.00029966	130.728
14	840.618794866	29.011390428	SIO2V	1.56078570	141.616
15	−926.722502535	1.005611320	N2VP950	1.00029966	142.120
16	2732.904696180	38.725041529	SIO2V	1.56078570	141.999
17	−356.203262494AS	2.005496104	N2VP950	1.00029966	141.858
18	318.151930355	16.617316424	SIO2V	1.56078570	124.740
19	513.819497301	1.562497532	N2VP950	1.00029966	122.663
20	171.455700974	30.277693574	SIO2V	1.56078570	111.385
21	154.841382726	1.064445848	N2VP950	1.00029966	98.077
22	127.756841801	43.191494812	SIO2V	1.56078570	94.695
23	104.271940246	52.476004091	N2VP950	1.00029966	74.378
24	−283.692700248	8.000000007	SIO2V	1.56078570	68.565
25	242.925344027	39.949819872	N2VP950	1.00029966	64.404
26	−117.414778719	8.181191942	SIO2V	1.56078570	63.037
27	197.144513187	26.431530314	N2VP950	1.00029966	69.190
28	−244.477949570	44.225451360	SIO2V	1.56078570	71.085
29	−230.356430065	1.409104251	N2VP950	1.00029966	88.427
30	1472.096760620AS	21.137736519	SIO2V	1.56078570	99.340
31	−450.715283484	1.259333876	N2VP950	1.00029966	101.126
32	3573.378947270	8.391191259	SIO2V	1.56078570	105.206
33	7695.066698120	1.258010005	N2VP950	1.00029966	106.474
34	1029.326174920	8.390466230	SIO2V	1.56078570	108.186
35	243.058844043	29.823514356	N2VP950	1.00029966	112.152
36	29057.985214100	38.911793339	SIO2V	1.56078570	114.058
37	−232.205630821	1.000000003	N2VP950	1.00029966	116.928
38	270.144711058	55.850950401	SIO2V	1.56078570	139.162
39	1183.955771760AS	20.935175304	N2VP950	1.00029966	138.048
40	0.000000000	−2.958030543	N2VP950	1.00029966	138.244
41	368.838236812	22.472409726	SIO2V	1.56078570	141.049
42	220.058626892	26.974361640	N2VP950	1.00029966	137.707
43	355.728536436	58.022036072	SIO2V	1.56078570	140.923
44	−861.478061183AS	4.104303800	N2VP950	1.00029966	142.103
45	420.713002153	55.049896341	SIO2V	1.56078570	142.502
46	−478.998238339	1.000000000	N2VP950	1.00029966	141.431
47	122.579574949	48.569396230	SIO2V	1.56078570	106.623
48	223.612364366AS	1.000000000	N2VP950	1.00029966	99.428
49	132.028746911	49.487311459	SIO2V	1.56078570	88.176
50	247.223694320	10.595001724	N2VP950	1.00029966	65.249
51	712.954951376AS	8.355490390	SIO2V	1.56078570	57.430
52	163.735058824	3.094306970	N2VP950	1.00029966	47.446
53	154.368612651	19.294967287	SIO2V	1.56078570	44.361
54	677.158668491	2.851896407	N2VP950	1.00029966	33.956
55	0.000000000	10.000000000	SIO2V	1.56078570	29.666
56	0.000000000	4.000000000	LUFTV193	1.00030168	22.559
57	0.000000000	0.000000000		1.00000000	14.020

TABLE 8-continued

ASPHERIC CONSTANTS	
SURFACE NR. 2	
K	0.0000
C1	1.38277367e−007
C2	−1.88982133e−011
C3	1.94899866e−015
C4	−3.04512613e−019
C5	3.31424645e−023
C6	−2.70316185e−027
C7	1.30470314e−031
C8	0.00000000e+000
C9	0.00000000e+000
SURFACE NR. 6	
K	0.0000
C1	−1.02654080e−008
C2	1.22477004e−011
C3	−1.70638250e−015
C4	2.48526394e−019
C5	−2.38582445e−023
C6	1.51451580e−027
C7	−6.30610228e−032
C8	0.00000000e+000
C9	0.00000000e+000
SURFACE NR. 12	
K	0.0000
C1	−3.36870323e−009
C2	1.77350477e−013
C3	1.19052376e−019
C4	−1.17127296e−022
C5	−9.25382522e−027
C6	4.88058037e−031
C7	−1.32782815e−035
C8	0.00000000e+000
C9	0.00000000e+000
SURFACE NR. 17	
K	0.0000
C1	2.29017476e−010
C2	4.92394931e−014
C3	2.34180010e−019
C4	−2.74433865e−023
C5	8.02938234e−029
C6	−1.05282366e−032
C7	−1.44319713e−038
C8	0.00000000e+000
C9	0.00000000e+000
SURFACE NR. 30	
K	0.0000
C1	−1.51349530e−008
C2	9.73999326e−013
C3	8.62745113e−018
C4	5.94720340e−022
C5	−4.71903409e−026
C6	2.87654316e−031
C7	4.40822786e−035
C8	0.00000000e+000
C9	0.00000000e+000
SURFACE NR. 39	
K	0.0000
C1	5.16807805e−009
C2	−6.52986543e−014
C3	−6.91577796e−019
C4	−3.61532300e−024
C5	−1.38222518e−027
C6	1.06689880e−031
C7	−1.65303231e−036
C8	0.00000000e+000
C9	0.00000000e+000
SURFACE NR. 44	
K	0.0000
C1	−3.74086200e−009
C2	9.09495287e−014

TABLE 8-continued

C3	−9.58269360e−019
C4	2.46215375e−023
C5	−8.23397865e−028
C6	1.33400957e−032
C7	−5.95002910e−037
C8	0.00000000e+000
C9	0.00000000e+000
SURFACE NR. 48	
K	0.0000
C1	−2.07951112e−009
C2	−3.24793684e−014
C3	−4.06763809e−018
C4	−4.85274422e−022
C5	2.39376432e−027
C6	2.44680800e−030
C7	−5.62502628e−035
C8	0.00000000e+000
C9	0.00000000e+000
SURFACE NR. 51	
K	0.0000
C1	−6.57065732e−009
C2	2.35659016e−012
C3	−1.23585829e−016
C4	5.34294269e−020
C5	−1.12897797e−023
C6	1.37710849e−027
C7	−1.15055048e−031
C8	0.00000000e+000
C9	0.00000000e+000

TABLE 8a

Surface	SINImax	Imax [deg]
0		
1	0.2265	13.09
2	0.2921	16.98
3	0.3021	17.58
4	0.3093	18.02
5	0.7727	50.60
6	0.7815	51.40
7	0.7503	48.62
8	0.3748	22.01
9	0.3301	19.27
10	0.4126	24.37
11	0.2102	12.13
12	0.4461	26.49
13	0.3287	19.19
14	0.3408	19.93
15	0.2163	12.49
16	0.1724	9.93
17	0.6379	39.64
18	0.1545	8.89
19	0.21	12.12
20	0.3165	18.45
21	0.284	16.50
22	0.4232	25.04
23	0.3618	21.21
24	0.6198	38.30
25	0.4029	23.76
26	0.6229	38.53
27	0.7684	50.21
28	0.4293	25.42
29	0.2783	16.16
30	0.5705	34.79
31	0.2529	14.65
32	0.4358	25.84
33	0.4179	24.70
34	0.4824	28.84
35	0.8986	63.97
36	0.6723	42.24
37	0.2232	12.90
38	0.8128	54.37

TABLE 8a-continued

Surface	SINImax	Imax [deg]
39	0.2534	14.68
40	0.1112	6.38
41	0.4829	28.87
42	0.8791	61.53
43	0.7207	46.11
44	0.2809	16.31
45	0.3478	20.35
46	0.6869	43.39
47	0.6164	38.05
48	0.4133	24.41
49	0.2042	11.78
50	0.7917	52.34
51	0.8696	60.41
52	0.7273	46.66
53	0.7381	47.57
54	0.901	64.29
55	0.9059	64.94
56	0.9059	64.94
57	0.9059	64.94

The invention claimed is:

1. A refractive projection objective for microlithography with a numerical aperture NA greater than 0.7, consisting of:

a first lens group immediately following an object plane of the projection objective and having negative refractive power;

a second lens group immediately following the first lens group and having positive refractive power;

a third lens group immediately following the second lens group and having negative refractive power for generating a constriction of a light beam passing through the projection objective;

a fourth lens group immediately following the third lens group and having positive refractive power; and

a fifth lens group immediately following the fourth lens group and having positive refractive power;

the projection objective thereby consisting of a first convexity, a second convexity, and a waist arranged between the first and second convexity, wherein

the first convexity has a maximum diameter denoted by D1, and the second convexity has a maximum diameter denoted by D2, and

$$0.8<D_1/D_2<1.1.$$

2. A refractive projection objective according to claim **1**, wherein the following relationship of the maximum diameters holds:

$$0.9<D_1/D_2<1.0.$$

3. A refractive projection objective according to claim **2**, wherein the following relationships holds:

$$L\cdot D_{max}/(NA\cdot 2yb)<12{,}850,$$

where L is the constructional length measured from the object plane to the image plane of the projection objective, NA is the image-side numerical aperture, D_{MAX} is the maximum diameter of the system and thus is D1 or D2, and 2 yb is the diameter of the image field.

4. A refractive projection objective according to claim **1**, wherein the first lens group has at least two negative lenses.

5. A refractive projection objective according to claim **1**, wherein an etendue value of the projection objective is greater than 2% of the constructional length, the etendue value being defined as the product of the image field diameter and the image-side numerical aperture.

6. A refractive projection objective according to claim **1**, wherein only lenses of one material are used.

7. A refractive projection objective according to claim **1**, wherein the ratio of constructional length (OO') and focal length of the fifth lens group is greater than eight.

8. A refractive projection objective according to claim **1**, wherein the first lens group contains at least one aspheric surface.

9. A refractive projection objective according to claim **8**, wherein the first lens group contains two aspheric surfaces on lens surfaces turned toward the object plane.

10. A refractive projection objective according to claim **8**, wherein aspheric surfaces situated in the first lens group are situated on converging lens surfaces turned toward the object plane.

11. A refractive projection objective according to claim **1**, wherein, when aspheric surfaces are used in the third lens group, these are always used on surfaces turned toward the image plane of the projection objective.

12. A refractive projection objective according to claim **1**, wherein no aspheric surfaces are provided in the third lens group.

13. A refractive projection objective according to claim **1**, wherein in the first lens group at least one meniscus lens, convex toward the object plane and with negative refractive power, is arranged.

14. A refractive projection objective according to claim **1**, wherein the fifth lens group contains at least two aspheric surfaces.

15. A refractive projection objective according to claim **1**, wherein the fifth lens group contains at least two biconvex lenses and two converging meniscuses, concave toward the image.

16. A refractive projection objective according to claim **1**, wherein the fifth lens group has a maximum of 5 converging lenses.

17. A refractive projection objective according to claim **1**, wherein, in the first and second lens groups, a height of a principal ray for an outermost field point is greater than a height of a marginal ray for imaging an axis point, this ratio being reversed within the third lens group.

18. A refractive projection objective according to claim **1**, wherein a maximum height of a marginal ray for imaging the axis point is more than three times as large as its height in the narrowest constriction in the third lens group.

19. A refractive projection objective according to claim **1**, wherein the maximum diameter of the second lens group is twice as large as the object field diameter.

20. A refractive projection objective according to claim **1**, wherein the minimum free diameter in the third lens group is smaller than 1.2 times the object field diameter.

21. A projection objective for microlithography including a projection objective according to claim **1**.

22. A refractive projection objective according to claim **1**, comprising a plurality of refractive elements, with a plurality of light rays incident at incident angles to each refractive element and exiting at exit angles, where at each refractive element a maximum incident angle and a maximum exit angle exists, wherein at least one refractive element which is separated from an image plane of the projection objective by at least one refractive elements, has a maximum incident angle or maximum exit angle in excess of 60 degrees measured in the optically thin medium surrounding said refractive element.

23. A refractive projection objective according to claim **22**, wherein at least one refractive element which is separated from an image plane of the projection objective by two to four refractive elements, has a maximum incident angle or maximum exit angle in excess of 60 degrees measured in the optically thin medium surrounding said refractive element.

24. A refractive projection objective according to claim **22**, wherein at least one refractive element has a maximum exit angle in excess of 60 degrees.

25. A refractive projection objective according to claim **24**, wherein the refractive element having a maximum exit angle in excess of 60 degrees is a meniscus lens with an image side concave surface.

26. A refractive projection objective according to claim **22**, wherein at least one of four refractive elements situated next to a system diaphragm of said objective has a maximum incident angle or a maximum exit angle in excess of 60 degrees.

27. A refractive projection objective according to claim **26**, wherein said at least one of said four refractive elements situated next to a system diaphragm is a meniscus lens.

28. A refractive projection objective according to claim **22**, wherein at least one refractive element situated between an object plane and a system diaphragm of said projection objective has a maximum incident angle or a maximum exit angle in excess of 60 degrees.

29. A refractive projection objective according to claim **28**, wherein said at least one refractive element is situated as one of four refractive elements next to the waist.

30. A refractive projection objective according to claim **22**, wherein at least one refractive element has a maximum incident angle or a maximum exit angle in the range of 50 degrees to 60 degrees and is situated as one of four refractive elements next to a system diaphragm.

31. A refractive projection objective according to claim **22**, wherein at least one refractive element bears an antireflective coating of radially varying incident or exit angle specific properties.

32. A refractive projection objective according to claim 31, wherein said refractive element is one having a maximum incident angle or a maximum exit angle in excess of 50 degrees.

33. A refractive projection objective according to claim 31, wherein said refractive element is one having a maximum incident angle or a maximum exit angle in excess of 60 degrees.

34. A method for the production of microstructured components, comprising:

providing a substrate with a photosensitive layer; and

exposing the substrate with ultraviolet light utilizing a mask and a projection exposure device having a projection objective according to claim 26,

whereby the substrate is structured in accordance with a pattern contained on the mask.

35. The method according to claim 34, further comprising developing the photosensitive layer subsequent to said exposing, for structuring the substrate in accordance with the pattern contained on the mask.

36. A refractive projection objective according to claim 1, wherein the meniscus lens immediately before the diaphragm has positive refractive power and the meniscus lens immediately after the diaphragm has negative refractive power and wherein concave surfaces of the meniscus lenses are facing towards an image plane of the projection objective.

37. A refractive projection objective according to claim 1, wherein the fourth lens group includes at least one negative lens having an image-side concave surface.

38. A refractive projection objective according to claim 1, wherein the fourth lens group includes at least one plano-concave lens having an object-side plane surface and an image-side concave surface.

39. A refractive projection objective according to claim 1, wherein the fourth lens group includes at least one negative meniscus lens having an image-side concave surface.

40. A refractive projection objective according to claim 1, wherein the fourth lens group includes two meniscus lenses each having an image-side concave surface.

41. A refractive projection objective according to claim 1, wherein two diverging meniscus lenses having convex surfaces facing the object plane are arranged in the first lens group.

42. A refractive projection objective according to claim 1, wherein at least three converging meniscus lenses and a biconvex positive lens are arranged in the second lens group, wherein at least one of the meniscus lenses has an object-side concave surface and at least one meniscus lens has an image-side concave surface.

43. A refractive projection objective according to claim 1, wherein the forth lens group has a first surface facing the object plane and a last surface facing the image plane and wherein the first surface and the last surface are aspheric surfaces.

44. A refractive projection objective according to claim 1, wherein a concave aspheric surface is arranged immediately before the system diaphragm.

45. A refractive projection objective according to claim 1, wherein the forth lens group has no more than four lenses.

46. A refractive projection objective according to claim 1, wherein an aspheric surface is arranged on an image-side lens surface and another aspheric surface is arranged on an object-side surface of a lens in the fifth lens group.

47. A refractive projection objective according to claim 1, wherein all aspheric surfaces arranged in the fifth lens group are arranged on an image-side lens surface of a lens with positive refractive power.

48. A refractive projection objective according to claim 1, wherein the fifth lens group includes at least two consecutive converging meniscus lenses and wherein aspheric surfaces are arranged on these meniscus lenses.

49. A refractive projection objective according to claim 1, wherein the fifth lens group has no more than one diverging lens.

50. A method for the production of microstructured components, comprising:

providing a substrate with a photosensitive layer; and

exposing the substrate with ultraviolet light utilizing a mask and a projection exposure device having a refractive projection objective according to claim 1,

whereby the substrate is structured in accordance with a pattern contained on the mask.

51. The method according to claim 50, further comprising developing the photosensitive layer subsequent to said exposing, for structuring the substrate in accordance with the pattern contained on the mask.

52. A refractive projection objective which, in the direction of propagation of the light, consists of a first lens group with negative refractive power, a second lens group with positive refractive power, a third lens group with negative refractive power, for the provision of a constriction of the light beam, a following fourth lens group with positive refractive power, and a system diaphragm with a following fifth lens group, which has positive refractive power,

wherein before the diaphragm and after the diaphragm a respective meniscus lens curved toward the object is arranged, and

wherein the fourth lens group includes at least one negative lens having an image-side concave surface.

53. A refractive projection objective which, in the direction of propagation of the light, consists of a first lens group with negative refractive power, a second lens group with positive refractive power, a third lens group with negative refractive power, for the provision of a constriction of the light beam, a following fourth lens group with positive refractive power, and a system diaphragm with a following fifth lens group, which has positive refractive power,

wherein before the diaphragm and after the diaphragm a respective meniscus lens curved toward the object is arranged, and,

wherein the fourth lens group includes at least one plano-concave lens having an object-side plane surface and an image-side concave surface.

54. A refractive projection objective which, in the direction of propagation of the light, consists of a first lens group with negative refractive power, a second lens group with positive refractive power, a third lens group with negative refractive power, for the provision of a constriction of the light beam, a following fourth lens group with positive refractive power, and a system diaphragm with a following fifth lens group, which has positive refractive power,

wherein before the diaphragm and after the diaphragm a respective meniscus lens curved toward the object is arranged, and,

wherein the fourth lens group includes at least one negative meniscus lens having an image-side concave surface.

55. A refractive projection objective according to claim 54, wherein the fourth lens group includes two meniscus lenses each having an image-side concave surface.

56. A refractive projection objective for projecting a pattern arranged in an object plane of the projection objective into an image plane of the projection objective with the aid of ultraviolet light of a prescribed operating wavelength at an image side numerical aperture NA>0.7 comprising:

a first lens group immediately following the object plane and having negative refractive power;

a second lens group immediately following the first lens group and having positive refractive power;

a third lens group immediately following the second lens group and having negative refractive power for generating a waist;

a fourth lens group immediately following the third lens group and having positive refractive power;

a fifth lens group immediately following the fourth lens group and having positive refractive power; and

a system diaphragm arranged between the fourth and the fifth lens group at a distance in front of the image plane;

wherein a meniscus lens curved toward the object plane is arranged immediately before the system diaphragm and a meniscus lens curved toward the object plane is arranged immediately after the system diaphragm;

wherein a negative group having an effective curvature with a concave side directed towards the image plane is arranged in a region of divergent radiation between the waist and the system diaphragm, and

wherein the negative group comprises exactly two lenses with negative refractive power and concave surfaces each directed towards the image.

57. A refractive projection objective for projecting a pattern arranged in an object plane of the projection objective into an image plane of the projection objective with the aid of ultraviolet light of a prescribed operating wavelength at an image side numerical aperture NA>0.7 comprising:

a first lens group immediately following the object plane and having negative refractive power;

a second lens group immediately following the first lens group and having positive refractive power;

a third lens group immediately following the second lens group and having negative refractive power for generating a place of narrowest constriction of a light beam passing through the projection objective;

a fourth lens group immediately following the third lens group and having positive refractive power;

a fifth lens group immediately following the fourth lens group and having positive refractive power; and

a system diaphragm arranged between the fourth and the fifth lens group at a distance in front of the image plane;

wherein two meniscus lenses with convex surfaces turned toward each other are arranged after the place of narrowest constriction and before the system diaphragm;

wherein a negative group having an effective curvature with a concave side directed towards the image plane is arranged in a region of divergent radiation between the place of narrowest constriction and the system diaphragm, and

wherein the negative group comprises exactly two lenses with negative refractive power and concave surfaces each directed towards the image.

* * * * *

UNITED STATES PATENT AND TRADEMARK OFFICE

CERTIFICATE OF CORRECTION

PATENT NO. : 7,190,527 B2
APPLICATION NO. : 10/931051
DATED : March 13, 2007
INVENTOR(S) : Hans-Juergen Rostalski et al.

It is certified that error appears in the above-identified patent and that said Letters Patent is hereby corrected as shown below:

Column 45, line 14, through column 45, line 22, cancel the text and insert the following claim:

--3. A refractive projection objective according to claim 2, wherein the following relationship holds:

$LD_{max}/(NA2yb)<12,850$,

where L is the constructional length measured from the object plane to the image plane of the projection objective, NA is the image-side numerical aperture, D_{MAX} is the maximum diameter of the system and thus is D1 or D2, and 2yb is the diameter of the image field.--

Column 46 line 17 through column 46, line 27, cancel the text and insert the following claim:

--22. A refractive projection objective according to claim 1, comprising a plurality of refractive elements, with a plurality of light rays incident at incident angles to each refractive element and exiting at exit angles, where at each refractive element a maximum incident angle and a maximum exit angle exists, wherein at least one refractive element which is separated from an image plane of the projection objective by at least one refractive element, has a maximum incident angle or maximum exit angle in excess of 60 degrees measured in the optically thin medium surrounding said refractive element.--

Column 47 line 9 through column 47, line 16, cancel the text and insert the following claim:

--34. A method for the production of microstructured components, comprising:
providing a substrate with a photosensitive layer; and
exposing the substrate with ultraviolet light utilizing a mask and a projection exposure device having a projection objective according to claim 22,
whereby the substrate is structured in accordance with a pattern contained on the mask.--

Signed and Sealed this
Fourth Day of January, 2011

David J. Kappos

David J. Kappos
Director of the United States Patent and Trademark Office

Column 47 line 62 through column 47, line 63, cancel the text and insert the following claim:

--45. A refractive projection objective according to claim 1, wherein the fourth lens group has no more than four lenses.--