Training manual
H-2000-1098-01-B

RENISHAW
apply innovation™

XL-80 laser system training course manual (Part 3)

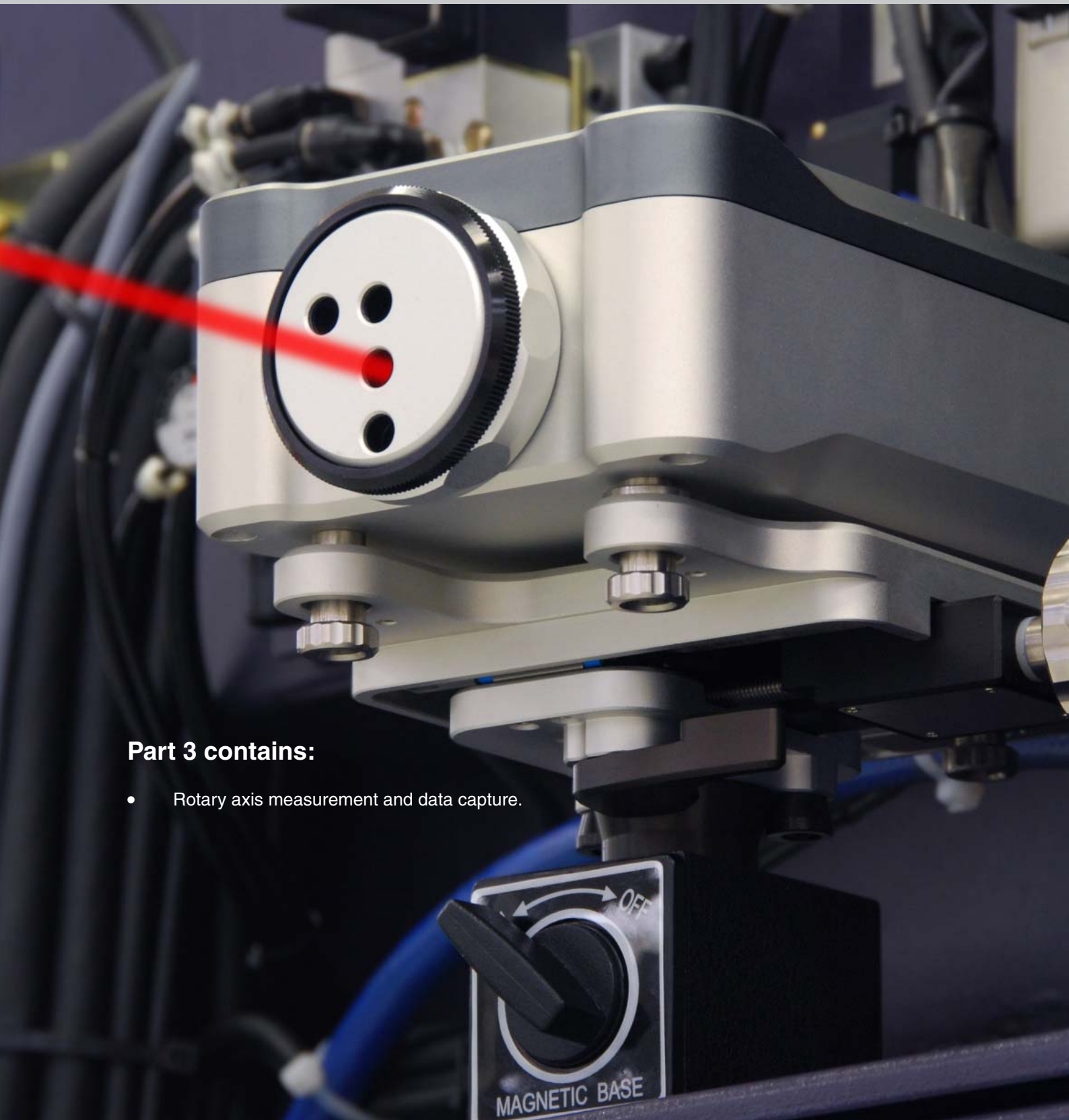

Part 3 contains:

- Rotary axis measurement and data capture.

© 2009 - 2010 Renishaw plc. All rights reserved.

This document may not be copied or reproduced in whole or in part, or transferred to any other media or language, by any means, without the prior written permission of Renishaw plc.

The information contained within this document is for training purposes only and should not be used for any other purpose.

Renishaw reserve the right to make changes to these notes and to the product described herein without obligation to notify any person of such changes.

Renishaw part no: H-2000-1098-01-B

Issued: July 2010

Contents

Contents

1.0 Before you begin

Disclaimer 1.2
Trademarks 1.2
Changes to equipment 1.2
Laser safety 1.3
Mechanical safety 1.4
XL power supply unit 1.4
Course overview 1.5
Aims of the course 1.5
Objectives of the course 1.5

2.0 Introduction to rotary measurement

Rotary axis optics (RX 10) 2.2
Rotary axis calibration - run types 2.4

3.0 Rotary axis measurement and data capture

Pre-test checklist 3.2
The optics 3.2
The RX 10 unit and control box 3.3
The machine set-up 3.4
The optic movement 3.5
Positioning the laser 3.6
Laser alignment procedure 3.7
Laser setup prior to beam alignment 3.7
Setting up the RX 10 unit 3.8
Referencing the RX 10 unit 3.10
Beam alignment procedure 3.11
Rotary axis software mode 3.15
Navigating the toolbar 3.16
Setting the range 3.17
Calibrating the RX 10 ..... 3.18
Checking the sign of movement 3.19

Contents

Automatic data capture setup 3.20
Automatic data capture 3.21
Semi-automatic data capture setup 3.22
Semi-automatic data capture 3.23
Data analysis 3.24
Producing error compensation 3.25
Defining compensation type 3.26
Viewing compensation table 3.27
Factors affecting accuracy 3.29

RENISHAW
apply innovation™

Before you begin

1.1

Disclaimer

RENISHAW HAS MADE CONSIDERABLE EFFORTS TO ENSURE THE CONTENT OF THIS DOCUMENT IS CORRECT AT THE DATE OF PUBLICATION BUT MAKES NO WARRANTIES OR REPRESENTATIONS REGARDING THE CONTENT. RENISHAW EXCLUDES LIABILITY, HOWSOEVER ARISING, FOR ANY INACCURACIES IN THIS DOCUMENT.

Trademarks

RENISHAW® and the probe emblem used in the RENISHAW logo are registered trademarks of Renishaw plc in the UK and other countries.

apply innovation™ is a trademarks of Renishaw plc.

All other brand names and product names used in this document are trade names, service marks, trademarks, or registered trademarks of their respective owners.

Changes to equipment

Renishaw reserves the right to change equipment specifications without notice.

Laser safety

In accordance with (IEC) EN60825-1, Renishaw XL lasers are Class 2 lasers and safety goggles are not required (under normal circumstances the eye will blink and look away before damage can occur).

Do not stare directly into the beam. Do not direct the beam at other people or into areas where people unconnected with the laser work might be present. It is safe to view a diffuse-reflected beam during system alignment.

FDA compliance (USA) – complies with 21CFR1040.10 and 1040.11 except for deviations pursuant to laser notice no. 50, dated July 26, 2001.

Rotating the shutter to the position shown ensures no beam is emitted.

Do not pick up the XL laser by the shutter. This will cause the shutter to detach from the laser and could cause damage to the system and/or injury to the operator.

There are no user-serviceable parts inside Renishaw XL laser system products. Do not remove any part of the housing; to do so could expose the user to high voltages and/or Class 3R laser radiation.

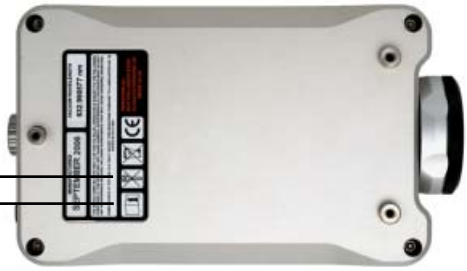

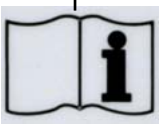

Ensure that you read and understand the XL laser measurement system manual (supplied on CD) before using any Renishaw XL laser system products.

Mechanical safety

When setting up and mounting Renishaw XL calibration products, beware of pinch and/or crush hazards that may be created e.g. due to magnetic mounting bases or the universal tripod.

Beware of trip hazards that may be created when using the Renishaw XL calibration system. e.g. due to trailing cables.

Exercise caution if Renishaw XL calibration products are to be mounted to moving or rotating machinery. Beware of cables becoming entangled.

Exercise extreme caution if Renishaw XL calibration products are to be mounted to machinery that may accelerate rapidly or move at high speed, which could lead to items colliding or being ejected.

If it is necessary to remove or disable any guards or safety features on the machine under test, it is the responsibility of the operator to ensure that appropriate alternative safety measures are adopted in line with the machine manufacturer's operating instructions or code of practice.

If you are using a part program or error correction parameters generated by the Renishaw software, it is the responsibility of the user to validate these at low feedrate and be prepared to operate an emergency stop button if necessary.

XL laser power supply unit

The XL laser system has been qualified for use with the power supply unit supplied with the system. A specification for this power supply unit can be found in the specification section of the electronic manual.

Take care not to allow the power supply unit to come into contact with fluids e.g. coolant on the floor.

On / Off switch

Quadrature output

Do not use the quadrature output facility of the XL laser to provide positional feedback control for a machine. The system is not designed to be used for feedback control and injury could result to the operator if used for this purpose.

Course overview

The following course notes are provided to assist you during the Renishaw XL-80 laser system rotary measurement and data capture training and, in conjunction with the specialist help and guidance offered by your course tutor, will:

- familiarise you with the principles and components of rotary axis measurement and data capture;
- explain how to plan a rotary axis test;
- familiarise you with the principles and components of automatic error compensation measurement;
- teach you how to align optics;
- teach you how to use the compensation functions.

Aims of the course

The aims of the course are:

1. To provide you with the skills and confidence necessary to perform rotary axis measurement and data capture on a chosen machine.
2. To allow you to practice setting up optics and to capture data and provide feedback.
3. To provide initial support and coaching to allow you to adapt these new skills to the workplace.

Objective of the course

At the end of the course you will be able to set-up the RX 10 rotary axis optics on a given machine tool and be capable of capturing a range of test results that can be used for further analysis.

Notes

RENISHAW
apply innovation™

Introduction to rotary measurement

2.1

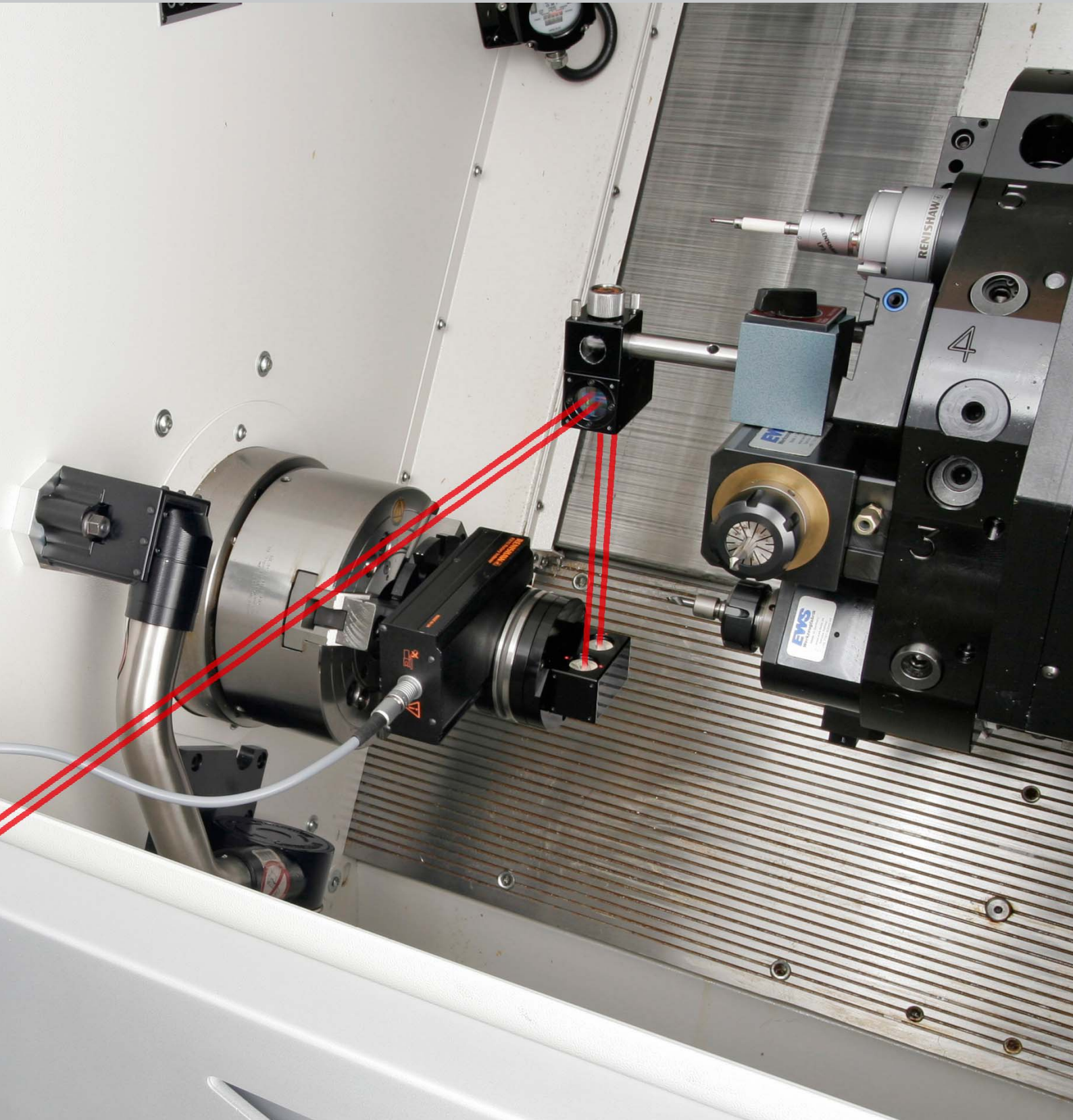

Rotary axis optics (RX 10)

The RX 10 is an accurate hirth coupled indexer which allows rotary axes to be calibrated to laser accuracy. The system operates vertically, horizontally or upside-down for easy calibration of rotary tables, dividing heads, indexing chucks etc through any angular increment.

A reflector is attached to the indexer via a mounting plate assembly which can be released for alignment or clamped tight to rotate with the indexer.

As the reflector rotates, moving interference fringes are generated in the returning beam. These fringes are detected by a photodetector located inside the laser enclosure. Interpolation and counting circuits record the number of fringes produced by the movement. Calibration software then converts the linear fringe counter value to a true angular reading before angular errors are calculated.

The rotation of an axis is calibrated by rotating it sequentially through a number of angular targets. As the axis rotates, the software counter-rotates the indexer in 5° steps to ensure that the laser beam is returned back to the laser.

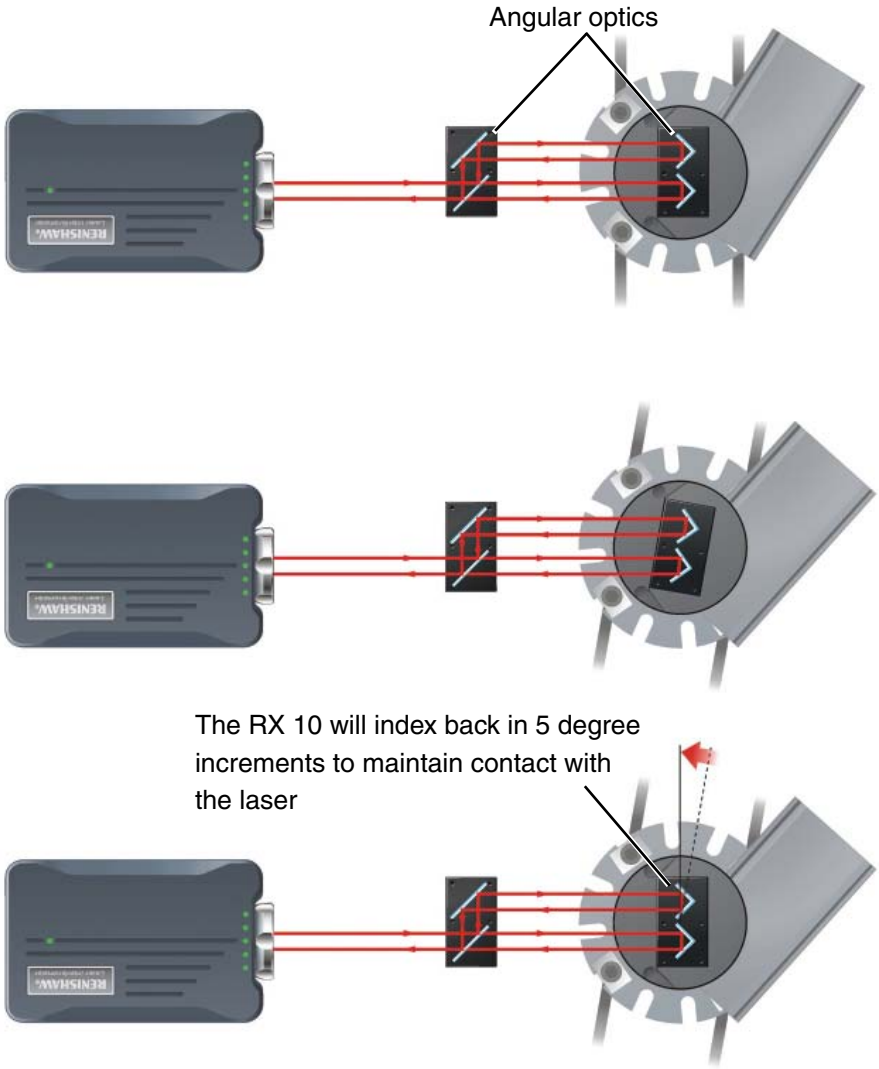

The RX 10 lifts, rotates and then relocates on the Hirth coupling

Rotary axis calibration - run types

When undertaking rotary axis calibration, it is necessary to specify the direction in which each target is visited and the run type required.

Direction can be one of the following:

- Unidirectional - each target is visited from one direction only.
- Bidirectional - each target is visited from both directions.

Run sequence is relevant when two or more runs through the targets is made. It can be:

- Alternate - after a run, the axis rewinds back to the first target ready to start the next run.
- Sequential - all runs are made through the targets in one direction before the direction of the axis is changed. The purpose of a sequential run is to allow data capture on multiple runs in one direction, effectively increasing the target range to multiples of 360°.

It is important to understand these terms. If the position of the axis is controlled by CNC, the part program you need to write must visit the targets in exactly the correct sequence. The software doesn't communicate with the controller so it is important that you get the part program correct otherwise data may be invalid.

Four permutations of direction and run sequence are possible:

- Unidirectional, alternate run.
- Bidirectional, alternate run.
- Unidirectional, sequential run.
- Bidirectional, sequential run.

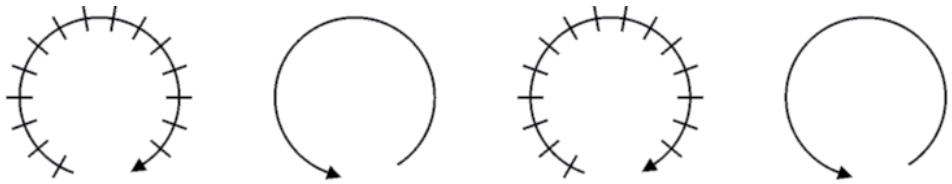

Targets	0-360		0-360	
Run	1 ↑	Rewind	2 ↑	Rewind

Rotary axis movement - uni-directional alternate run

Targets	0-360	360-0	0-360	360-0
Run	1 ↑	1 ↓	2 ↑	2 ↓

Rotary axis movement - bi-directional alternate run

Targets	0-360		360-720	
Run	1 ↑	No rewind	2 ↑	No rewind

Rotary axis movement - uni-directional sequential run

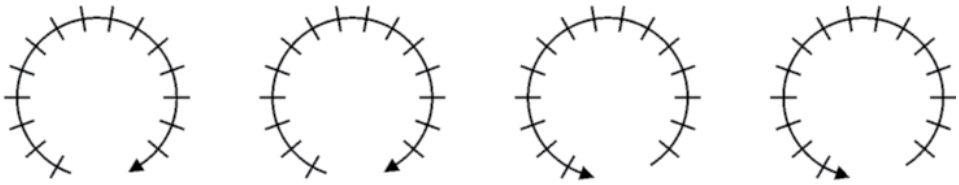

Targets	0-360	360-0	0-360	360-0
Run	1 ↑	2 ↑	2 ↓	1 ↓

Rotary axis movement - bi-directional sequential run

Notes

RENISHAW
apply innovation™

Rotary axis measurement and data capture

3.1

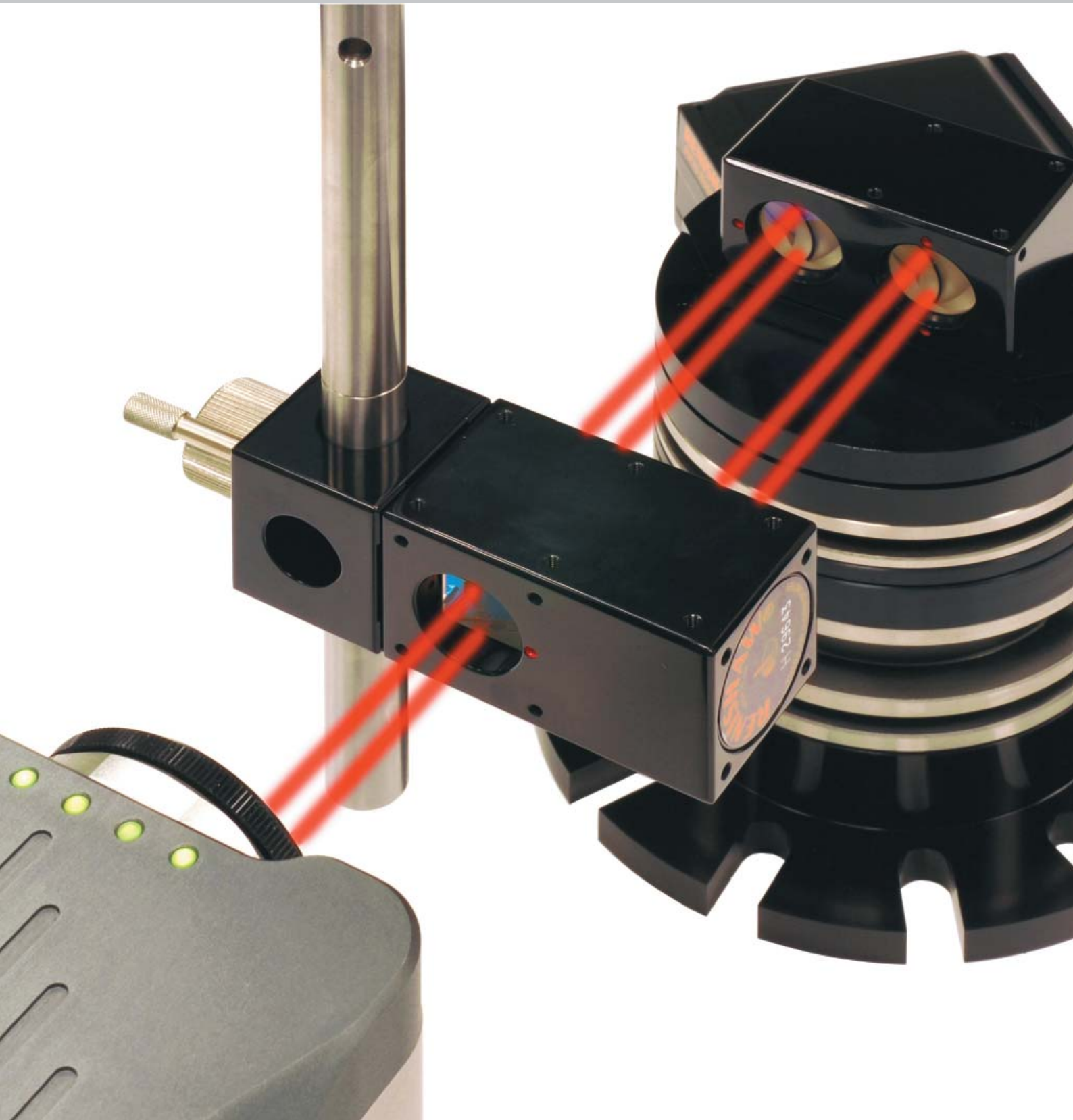

Pre-test checklist

The optics

The angular measurement optics are used for measuring rotary positional accuracy. An angular measurement optics kit, as shown in Figure 1, consists of:

- angular reflector;
- angular interferometer;
- two targets to help with optical alignment.

To perform rotary measurements, you may also need an optics mounting kit and suitable clamps for fastening the optics to the machine to be calibrated.

Figure 1

The RX 10 unit and control box

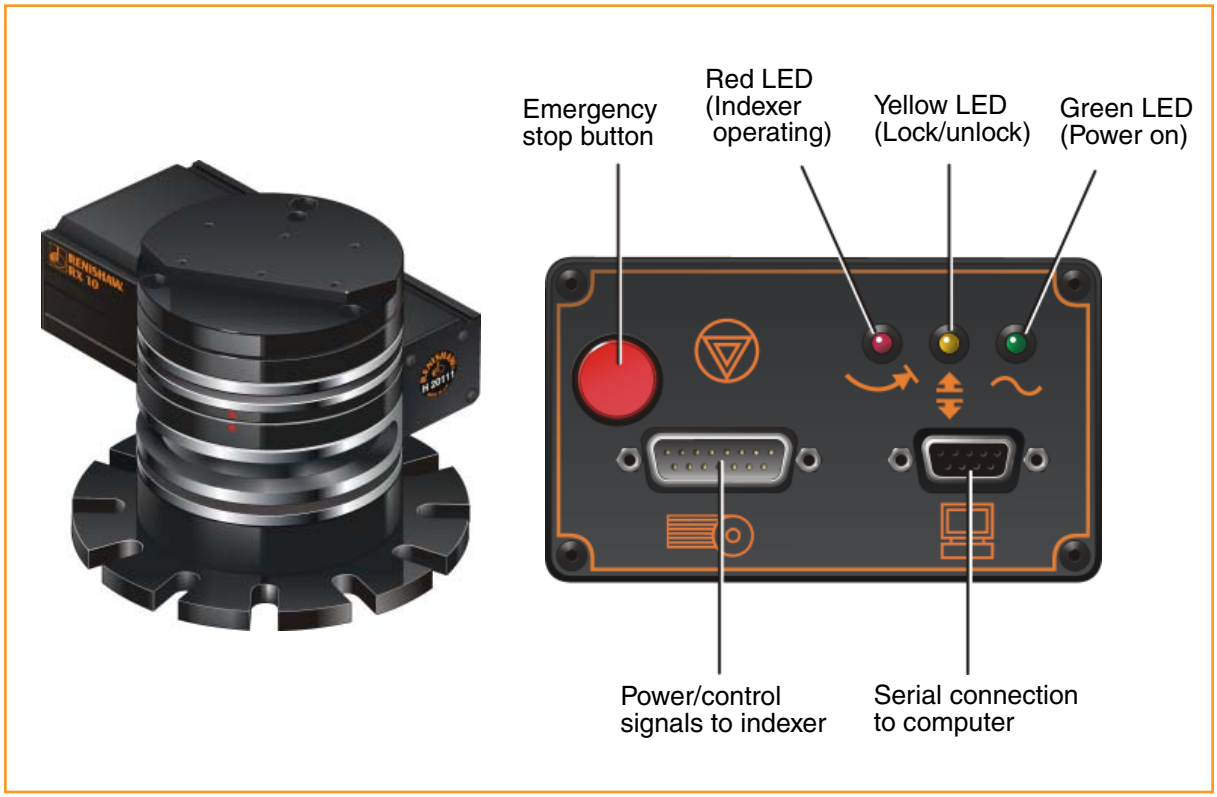

Figure 2

Notes

The machine set-up

Figure 3

The optic movement

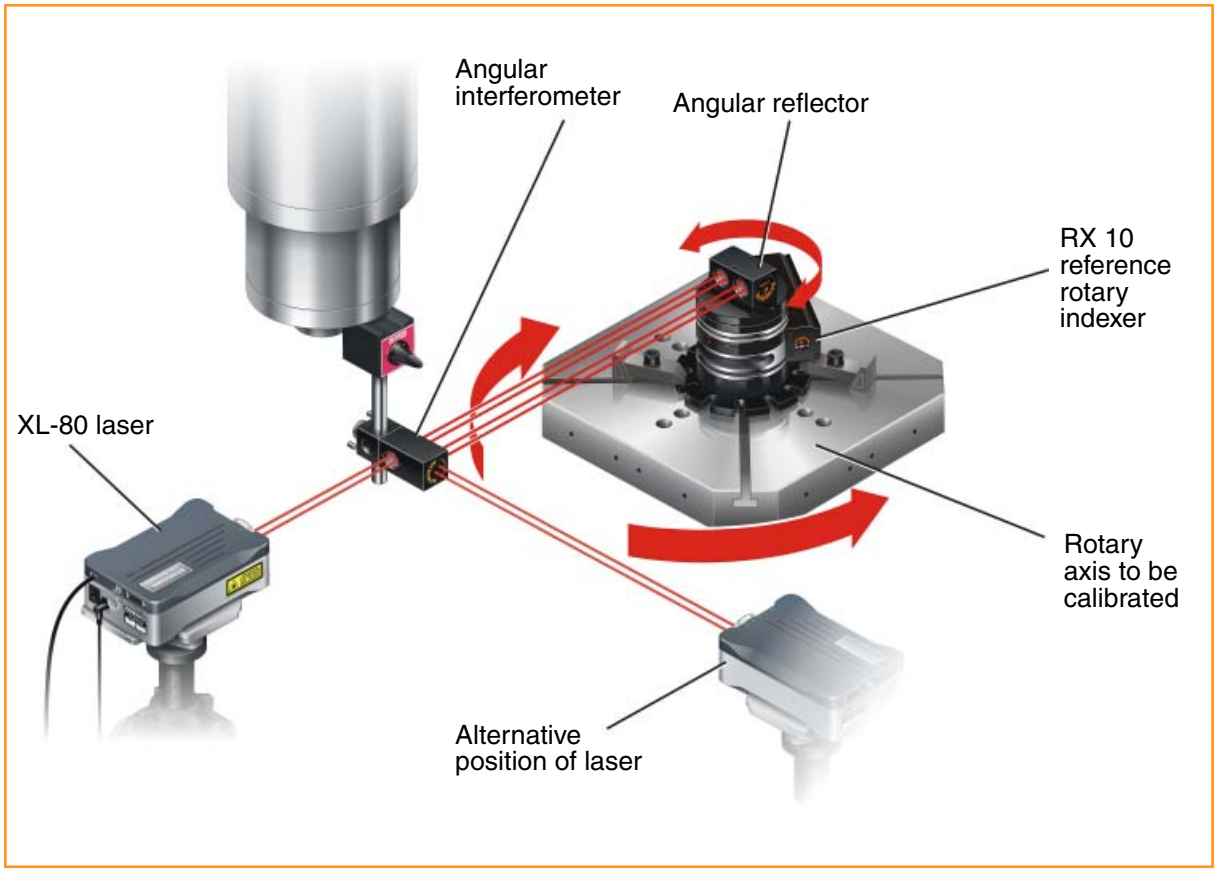

Figure 4

Notes

Positioning the laser

Figure 5

If the machine to be calibrated is supported on anti-vibration mounts or pneumatically, the laser must be rigidly attached to the machine itself.

Notes

Laser alignment procedures

Laser set-up prior to beam alignment

It is helpful to ensure that the laser is reasonably aligned, by eye, with the axis within which you wish to capture data (Figure 6).

Figure 6

When the laser has been roughly aligned, it should be roughly levelled with the help of a spirit level (Figure 7).

Figure 7

Setting up the RX 10 unit

Prior to fixing any components to the machine, it is advisable to reference the rotating axis first (Figure 8). Ensure that the emergency stop on the control box is in the out position.

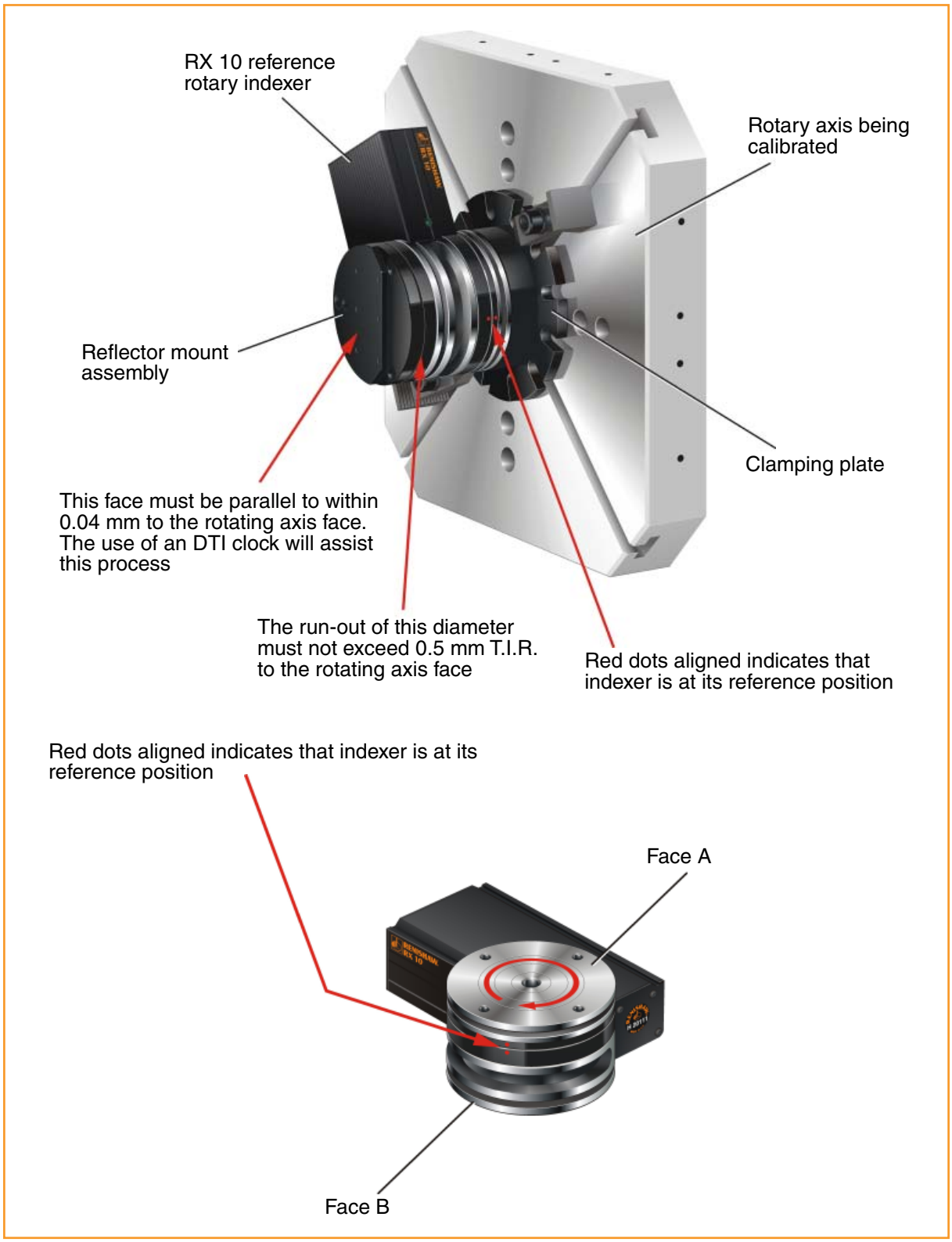

Figure 8

When using the RX 10 in the horizontal plane on a vertical axis, the mounting plate should be fixed to Face B of the RX 10 unit. This eliminates the RX 10 lifting any excessive weight as shown in Figure 9.

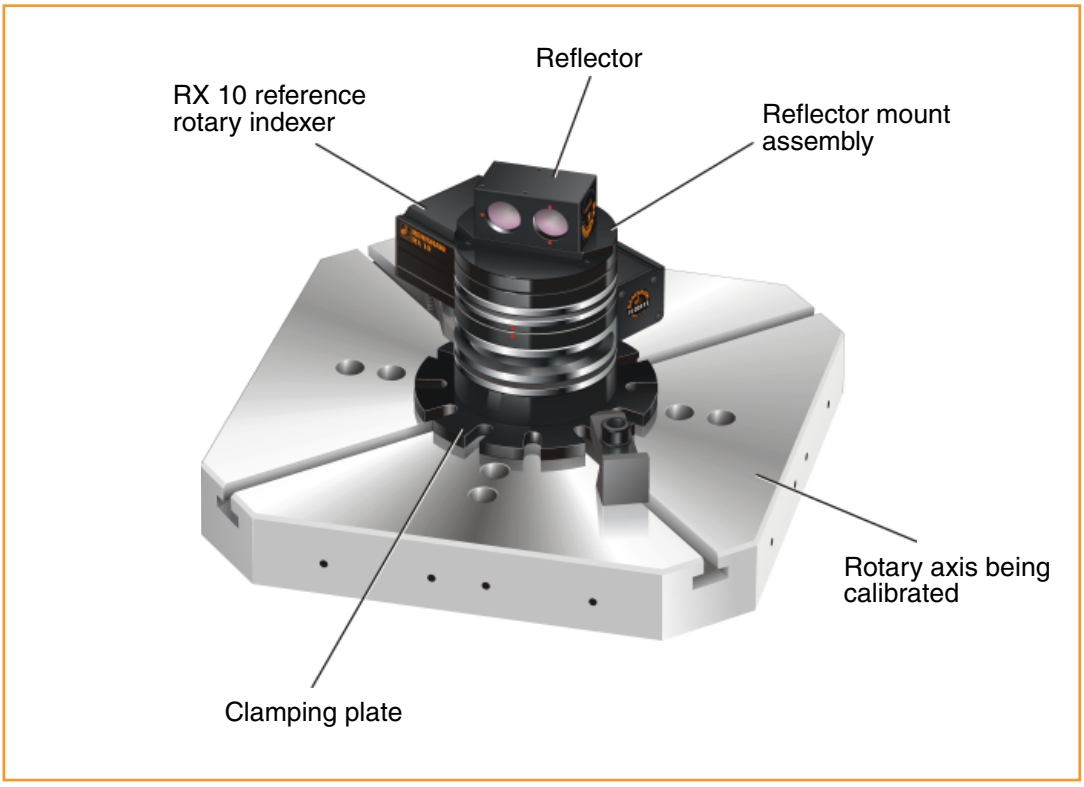

Figure 9

When using the RX 10 in the vertical plane on a horizontal axis, the mounting plate should be fixed to Face A of the RX 10 unit. This ensures that the RX 10 stays in the same position when the rotary axis is indexing as shown in Figure 10.

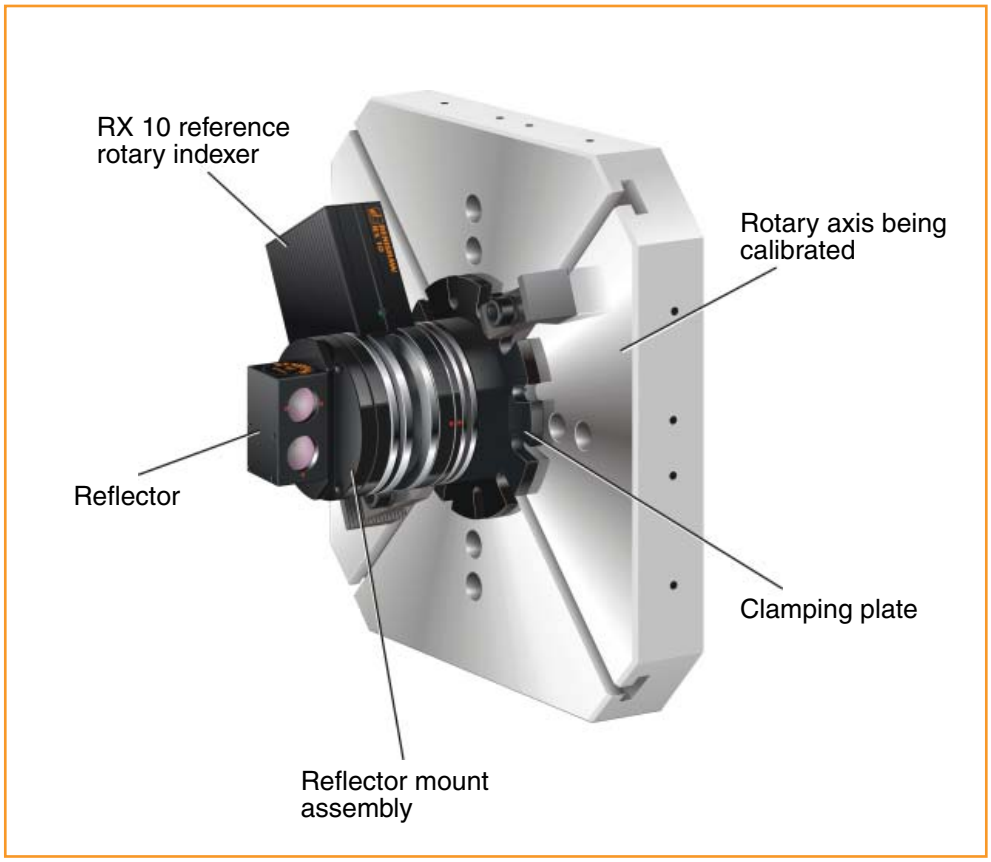

Figure 10

Referencing the RX 10 unit

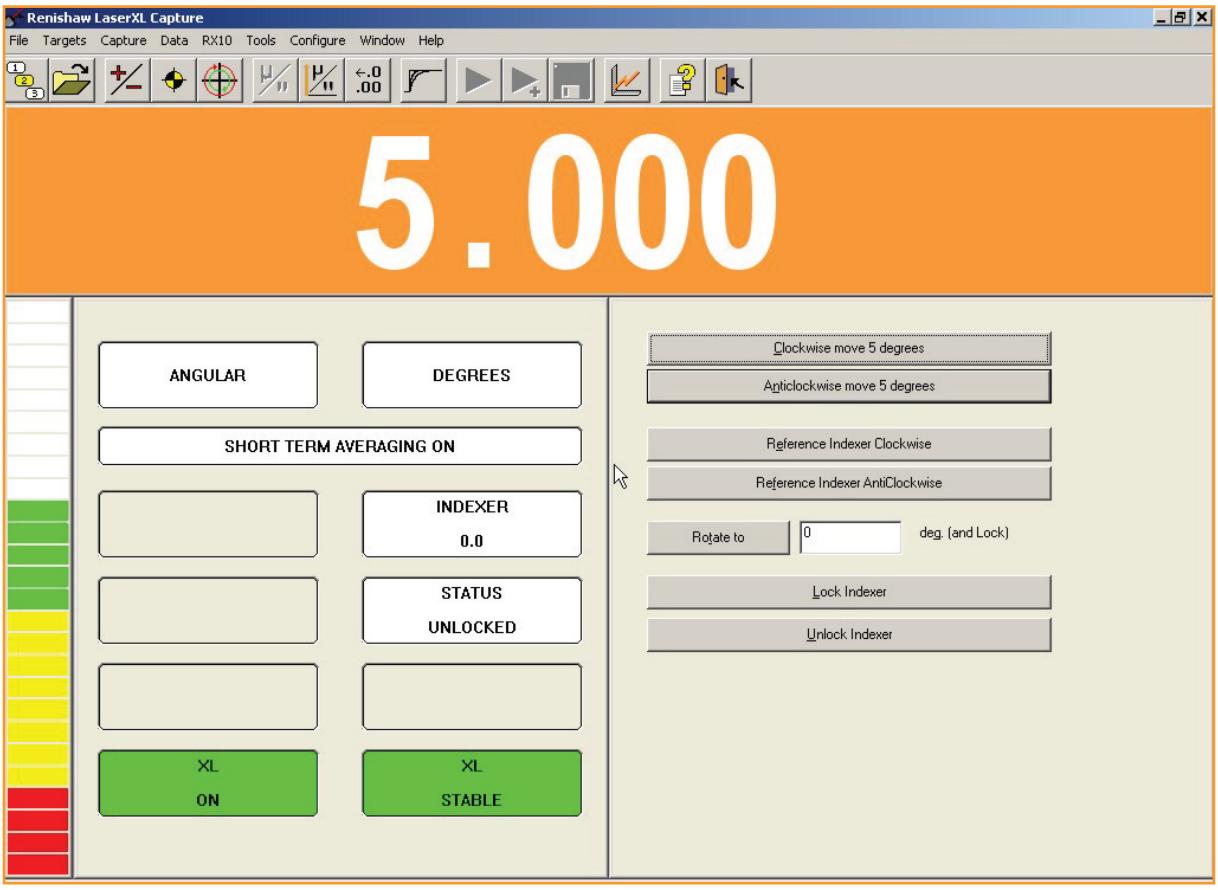

Figure 11

Notes

Beam alignment procedure

It is necessary to align the reflector perpendicular to the laser beam in the vertical and horizontal planes. The following procedure may help you do this:

1. Place a steel gauge block in the path of the laser beam and against the angular reflector. For vertical adjustments, rotate the reflector so that the reflected beam from the gauge block surface is returned into the output beam aperture on the laser head. Lock the optic plate into position. For horizontal adjustments, rotate the yaw controls on the laser tripod stage so that the reflected beam from the gauge block surface is returned into the output beam aperture on the laser head. When this occurs, the laser beam is aligned (it is not unusual for the laser to go unstable when the return beam enters the output aperture) as shown in Figure 12.

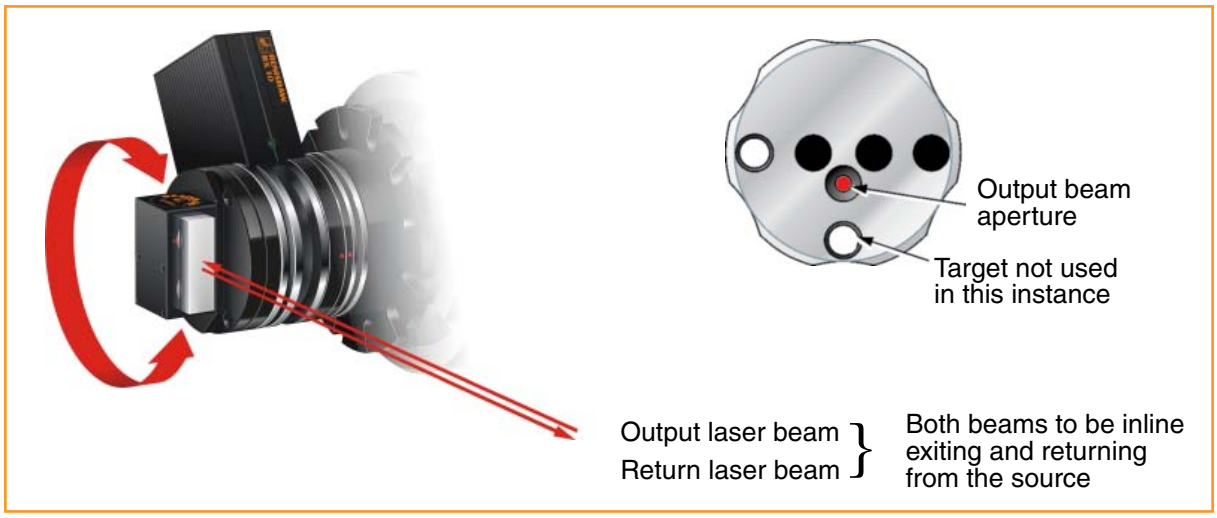

Figure 12

2. The angular interferometer should be placed into position between the laser and the angular reflector, as close to the reflector as possible and mounted onto a rigid location. Ensure that the outside faces of the interferometer and reflector are square with the machine and aligned with one another. Roll misalignment between the optics will result in the two return beams not overlapping. Note: If the interferometer is skewed, then degradation in accuracy and possible failure to detect when the beam is obstructed may occur. As a general rule, it is advisable to align the interferometer to better than ±2° in roll, pitch and yaw, which can often be done by eye (Figure 13).

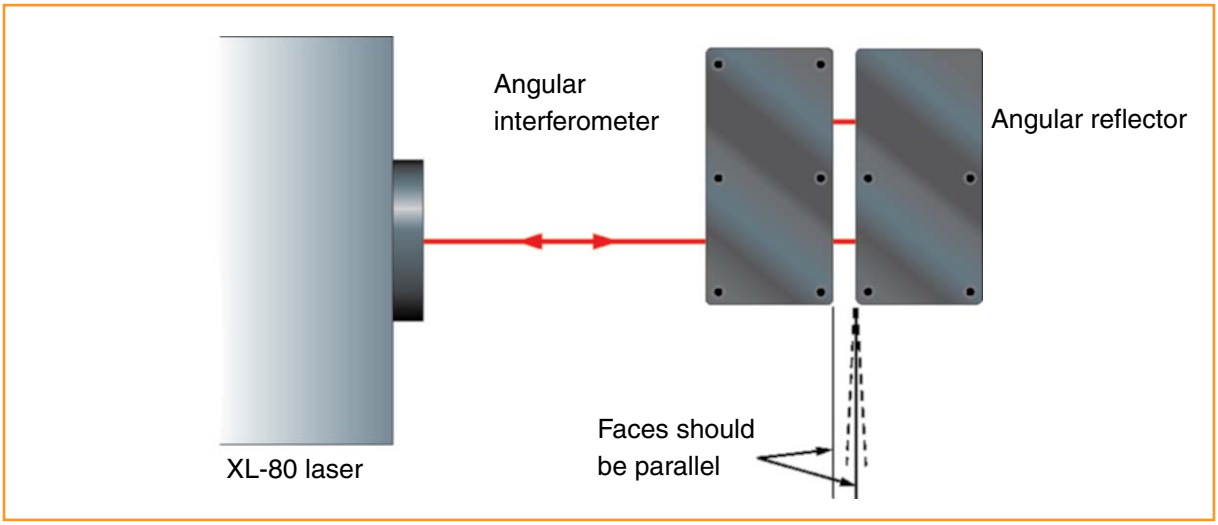

Figure 13

3. Rotate the laser shutter so that the laser is outputting a reduced diameter beam as shown in Figure 14. The smaller diameter beam makes it easier to see any misalignment.

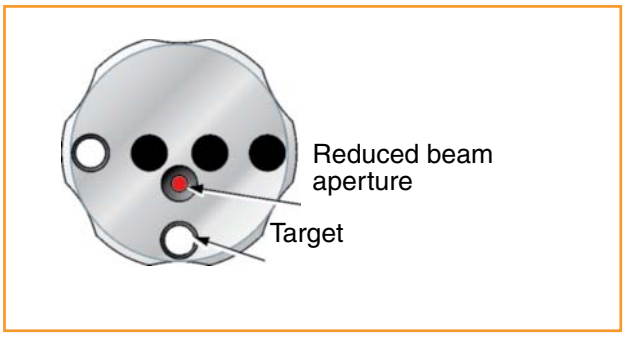

Figure 14

4. Place a target onto the angular interferometer and translate the laser or the machine until the beam hits the white spot on the target as shown in Figure 15.

Figure 15

5. Remove the target and check that the beam returned from the reflector hits the centre of the target on the XL-80 shutter. If it does not, then translate the laser or the optic until the beam hits the centre of the target (Figure 16).

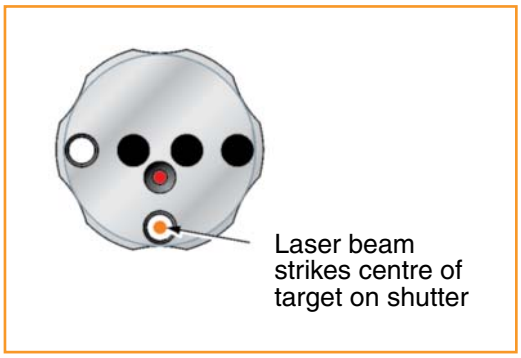

Figure 16

6. Rotate the shutter into its measurement position as shown in Figure 17 and check the signal strength displayed in the RX 10 data capture software. The beam should give a full strength reading. Clear the BEAM OBSTRUCT error by datuming the laser. To datum the laser, use the [Ctrl] + [D] keys or use the button on the toolbar.

Figure 17

7. Unlock and lock the indexer to raise and lower the reflector. The aim is to align the laser so that the signal strength changes from low level to low level with a peak in between as the table unlocks and locks. Try to bias it so that there is slightly more signal strength when the indexer is unlocked than when locked.

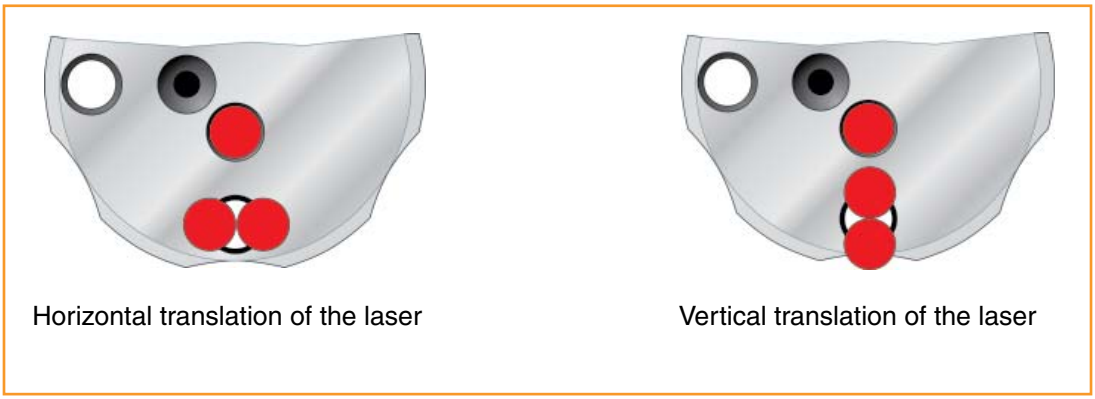

Figure 18

8. Figure 18 above shows how the beam should be aligned on the detector aperture when the indexer is in a locked and an unlocked state.

Notes

Rotary axis software mode

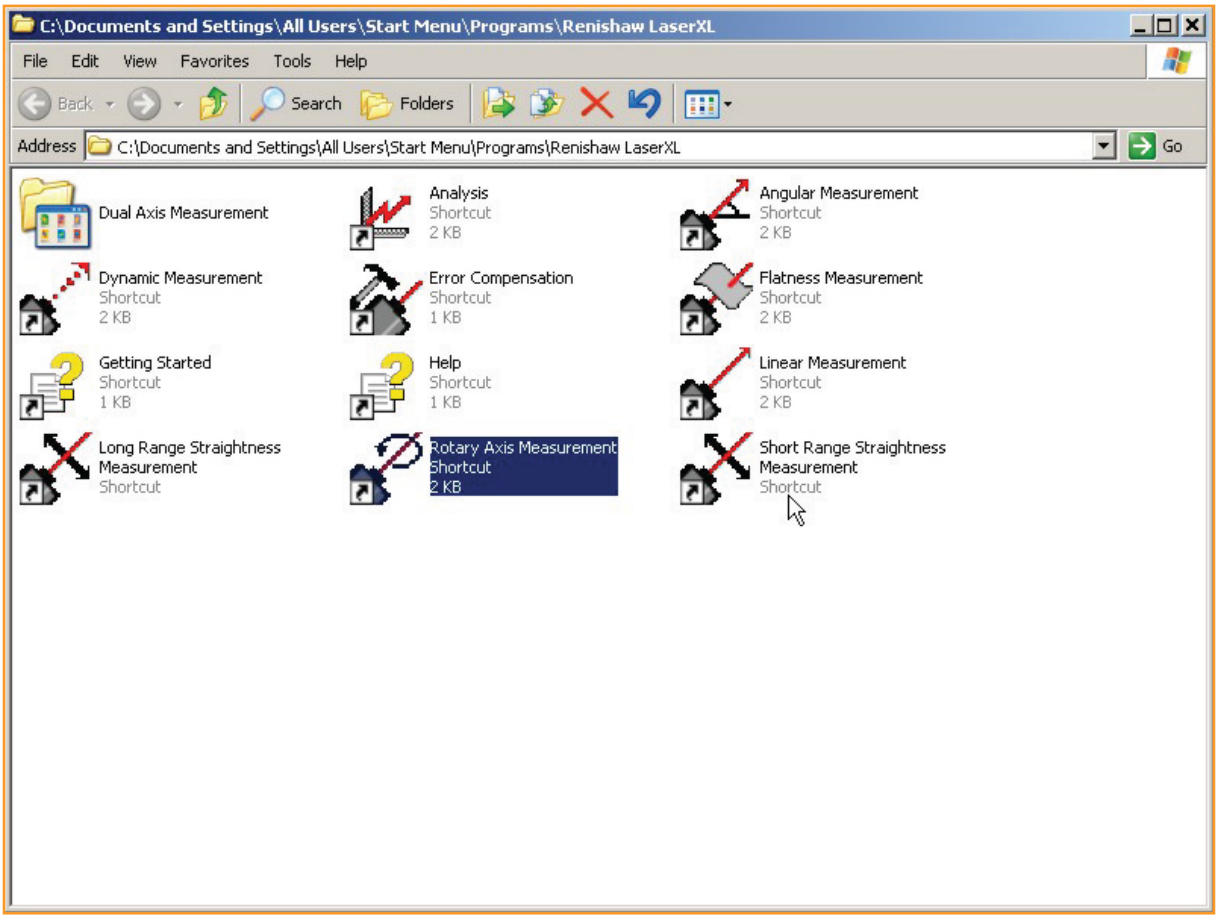

Figure 19

As we proceed through this section, you will learn how to navigate the toolbar, how to setup the software to capture data and how to use the various functions of data analysis.

Navigating the toolbar

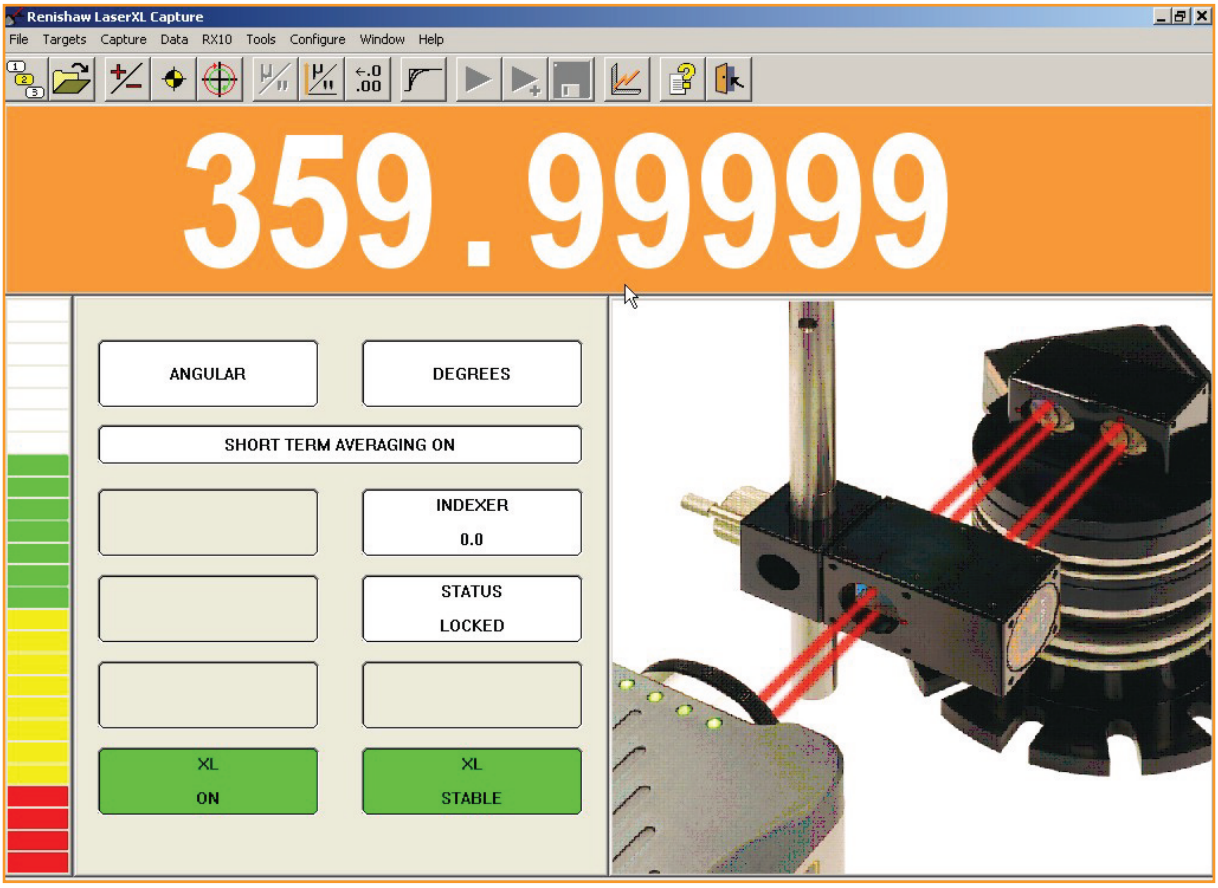

Figure 20

Notes

Setting the range

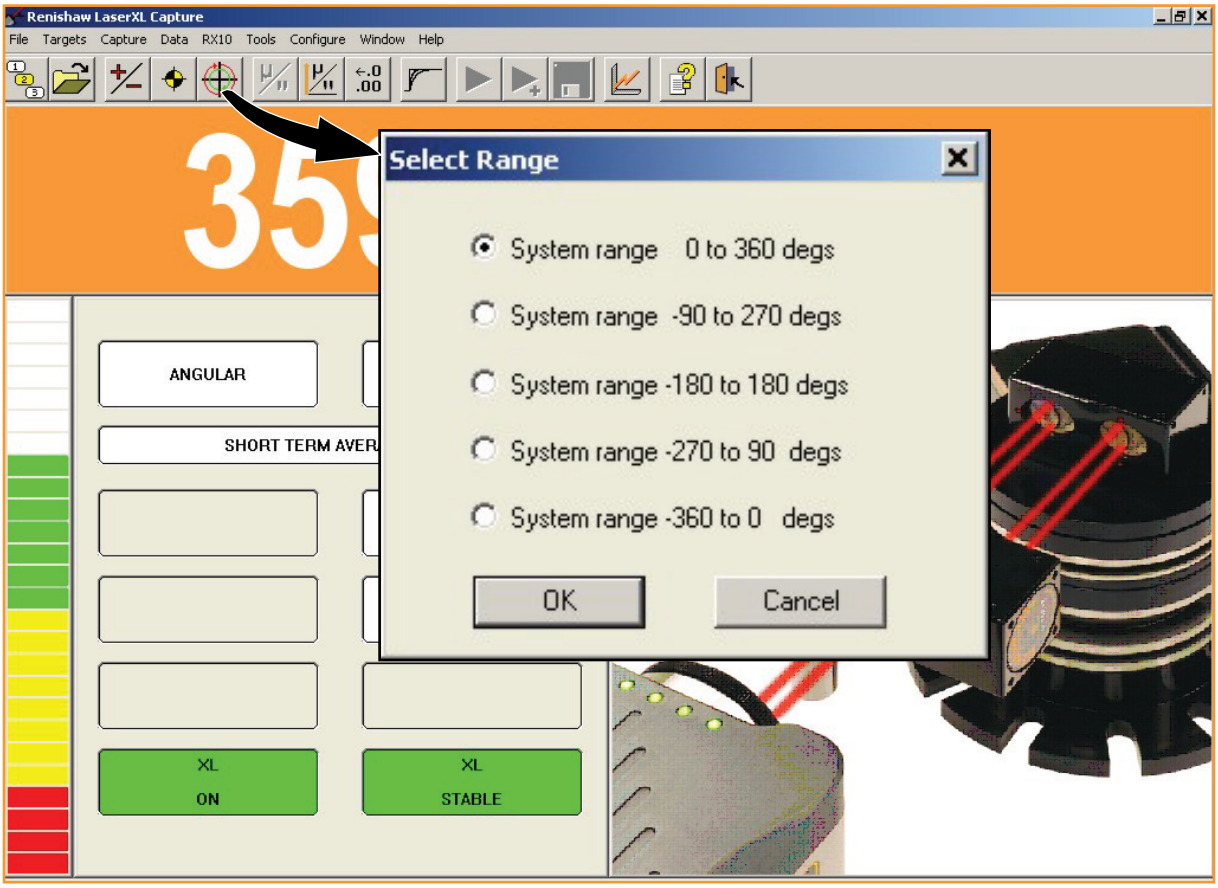

Figure 21

To set the required range, click on the button on the toolbar or use the pre-set range keyboard command [Ctrl] + [P]. The 'Select Range' dialog box appears:

A working range of 10° to 100° could be covered by a system range of 0° to 360°, -180° to 180° and -90 to -270. Figure 22 below shows the total range of the equipment and the ranges available:

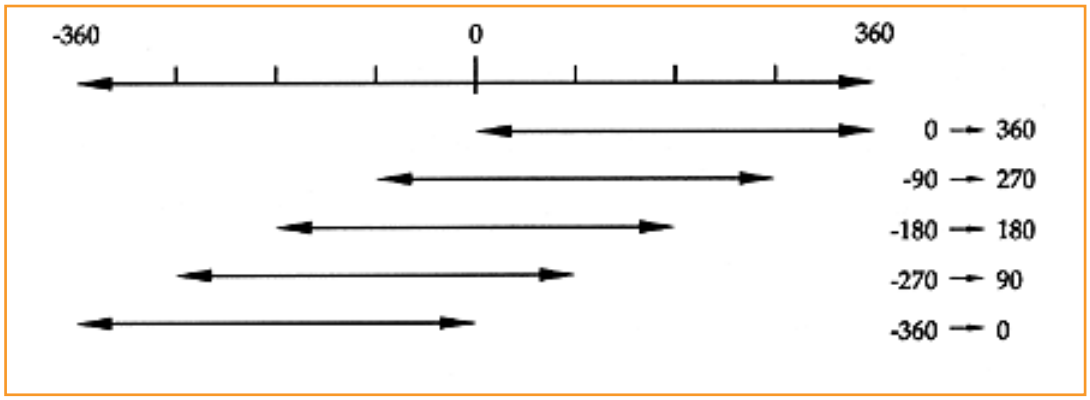

Figure 22

Calibrating the RX 10

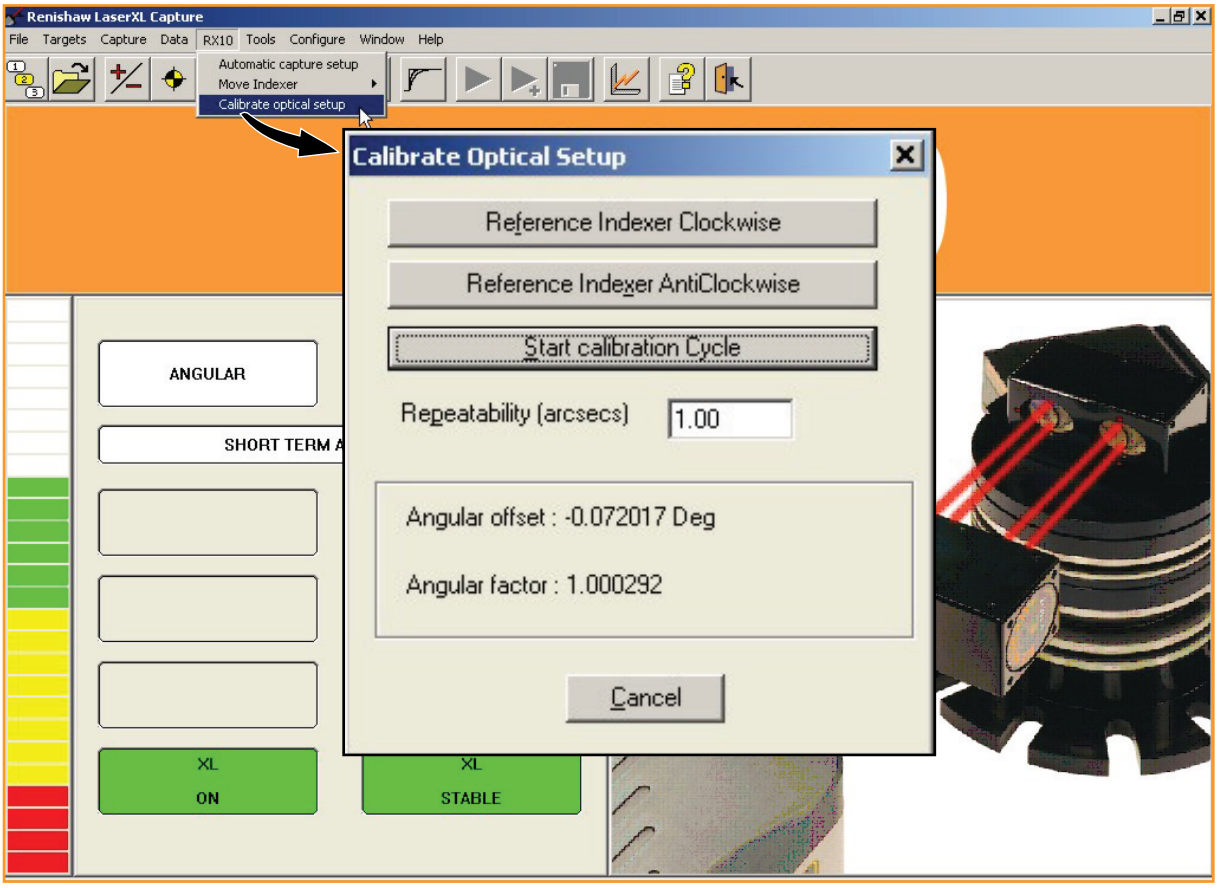

Figure 23

Notes

Checking the sign of movement

Prior to data capture, the direction of the machine travel must be the same as the software i.e. positive and negative movement. To do this, it is advisable to rotate the axis by approximately plus 5 degrees and check that the display also shows a positive movement.

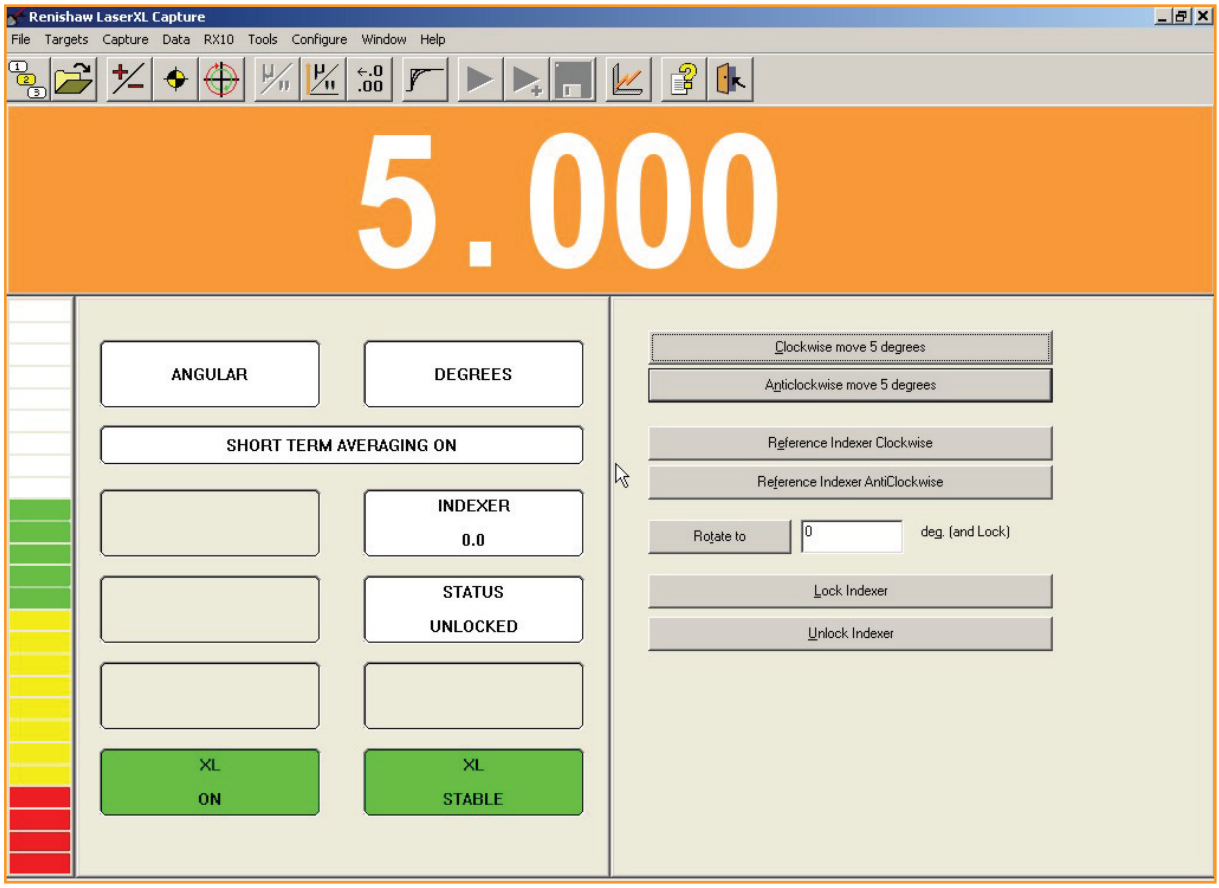

Figure 24

Notes

Automatic data capture setup

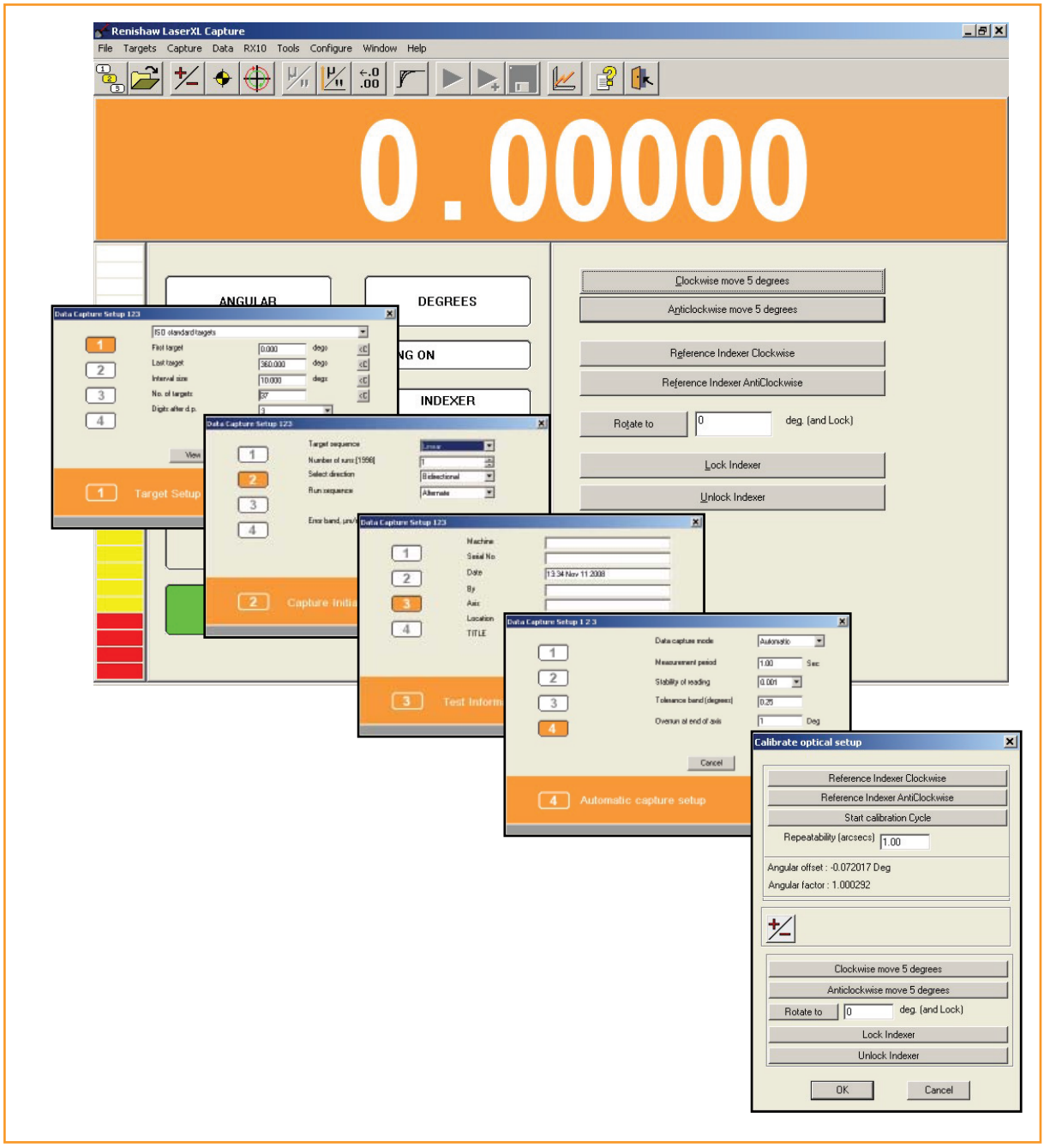

Figure 25

Notes

Automatic data capture

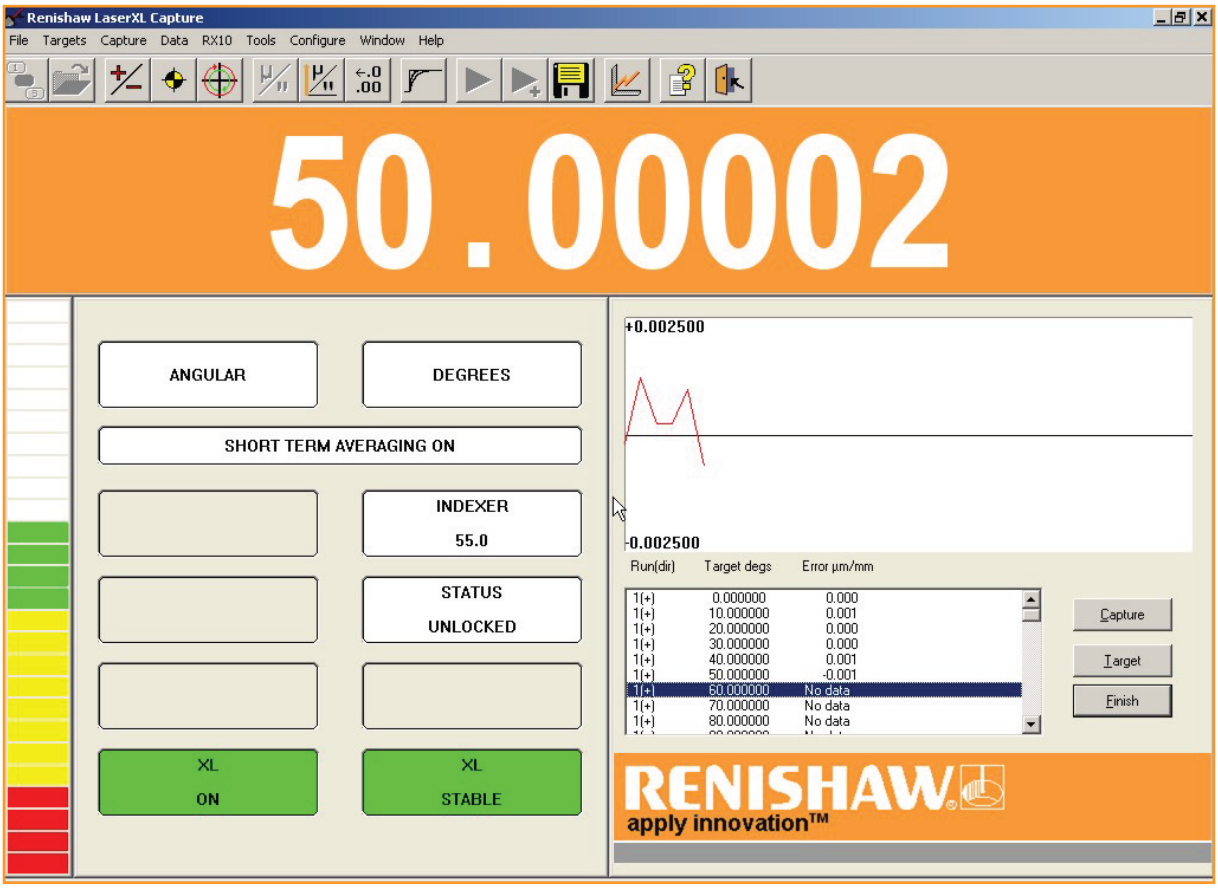

Figure 26

Notes

Semi-automatic data capture setup

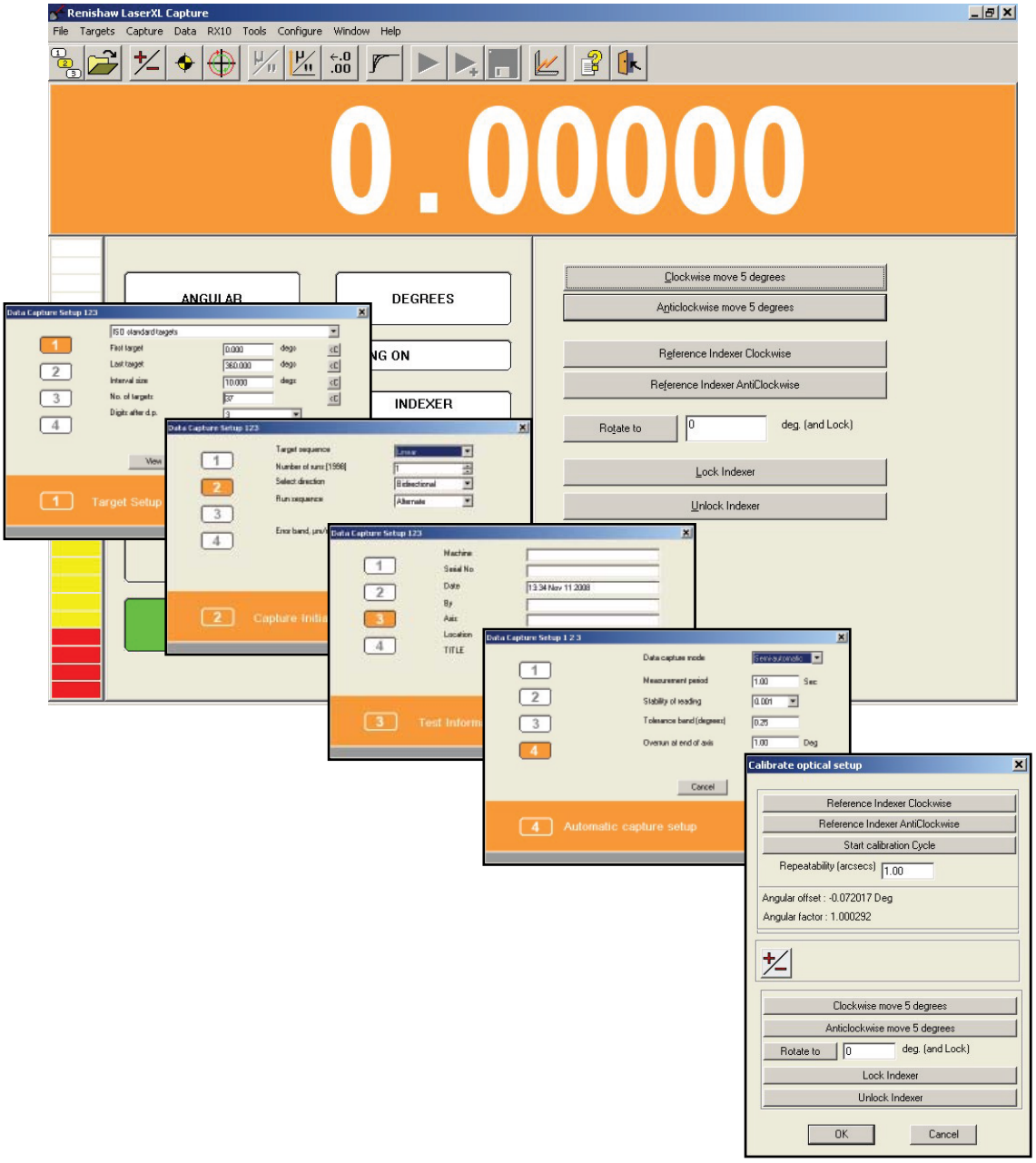

Notes

Semi-automatic data capture

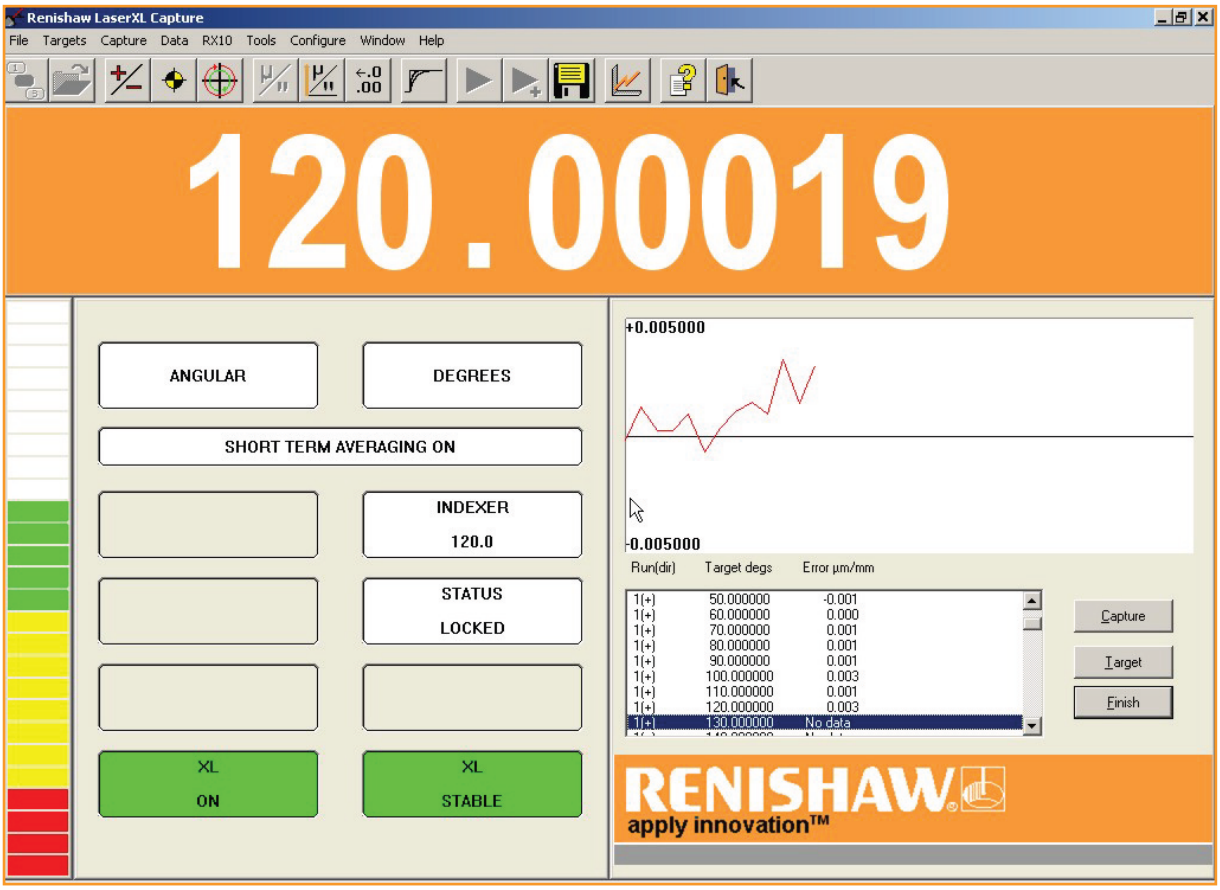

Figure 28

Notes

Data analysis

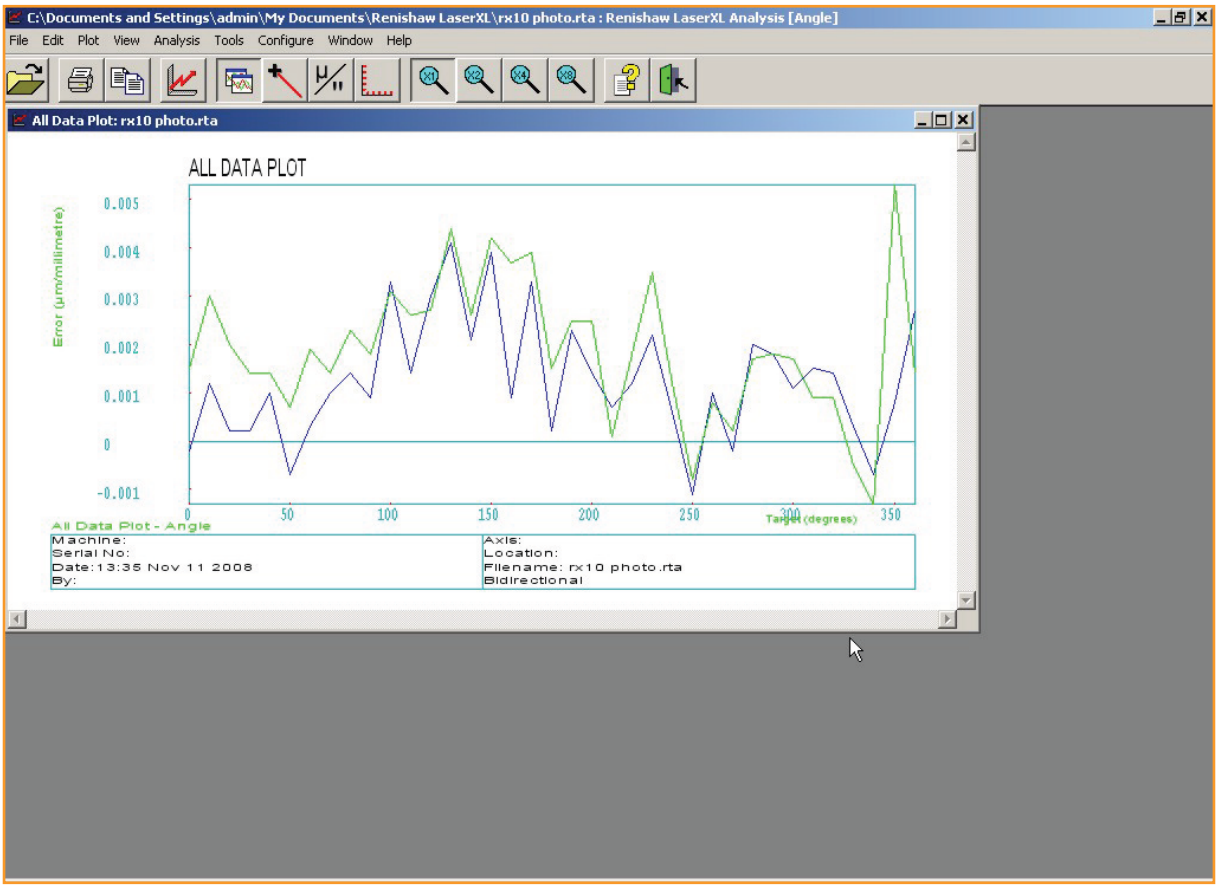

Figure 29

Notes

Producing error compensation

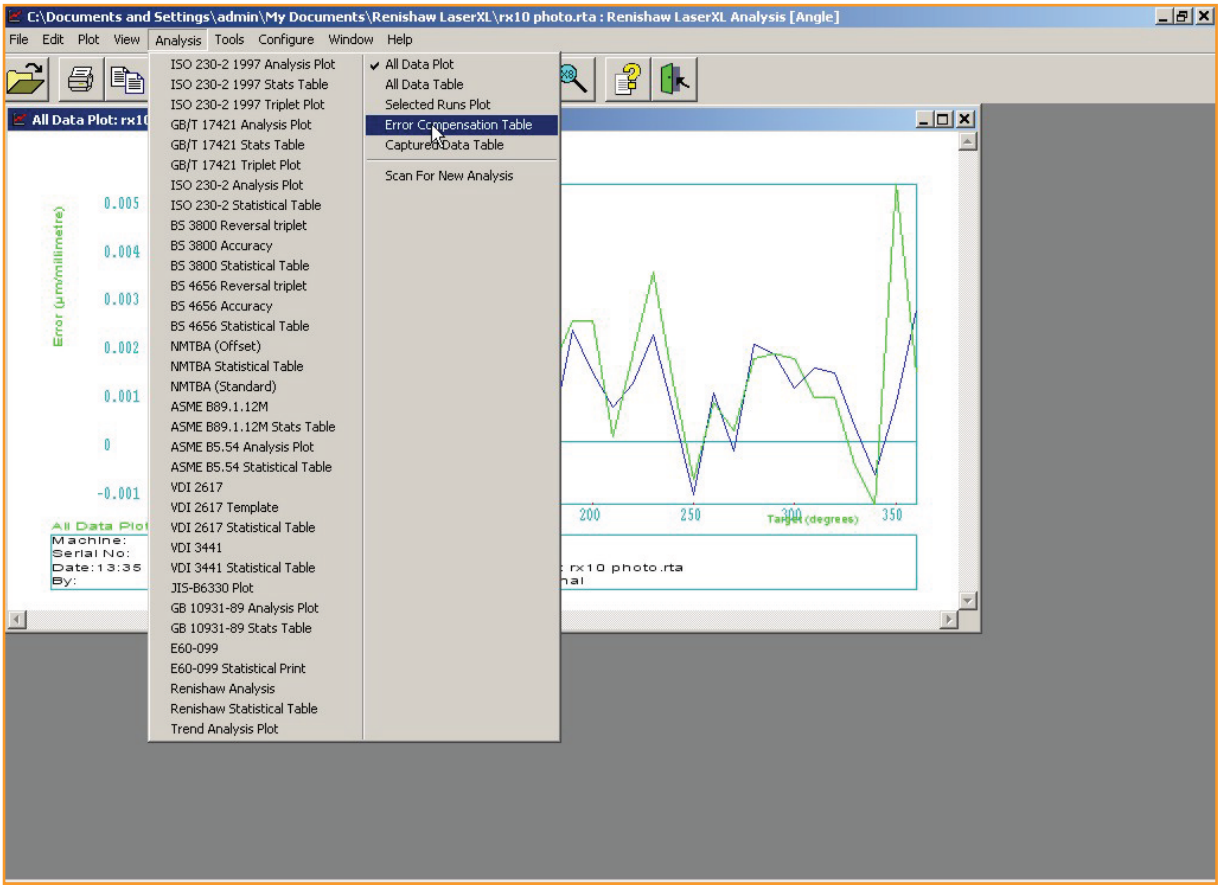

Figure 30

Notes

Defining compensation type

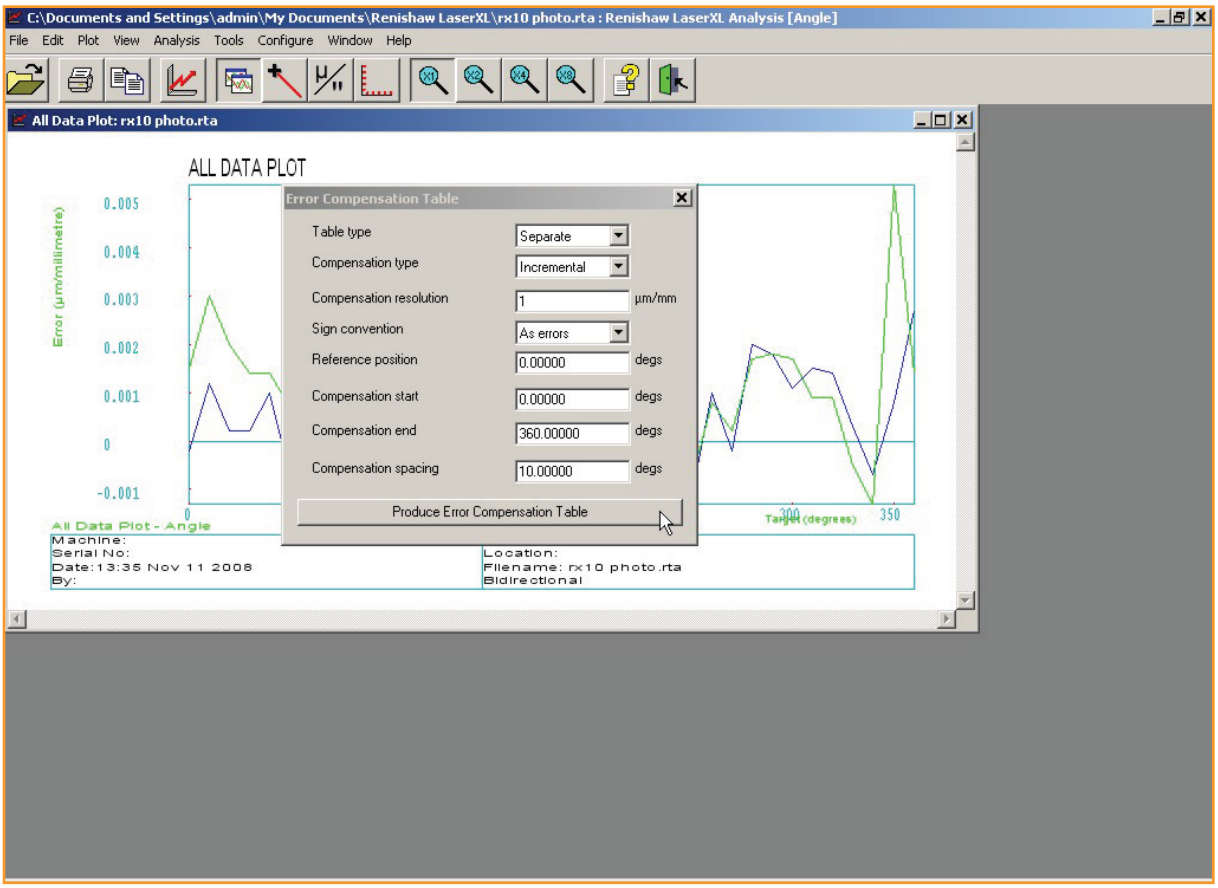

Figure 31

Notes

Viewing compensation table

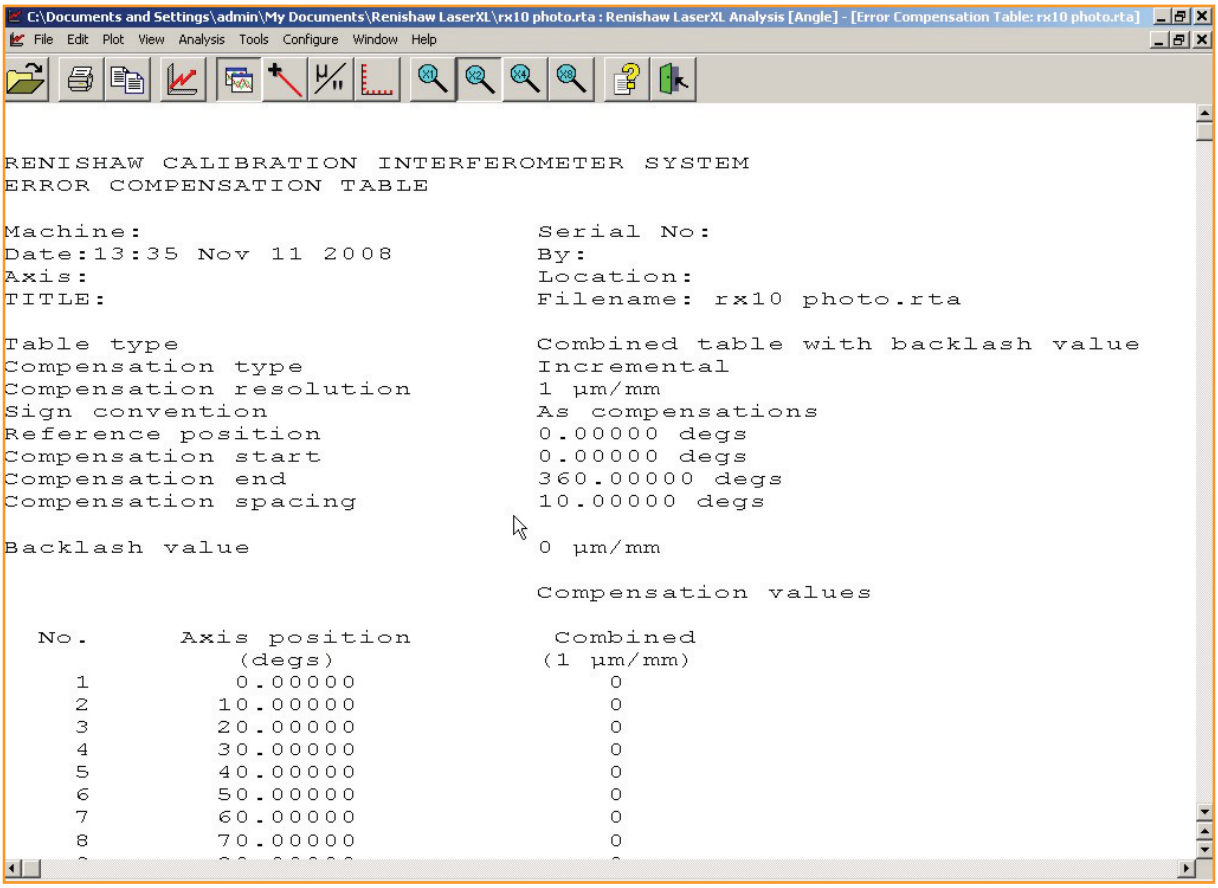

Figure 32

Notes

Notes

Factors affecting accuracy

Tolerance of misalignments

When you mount the indexer and setup the optics, it is important to get them aligned as best as possible. Small misalignments are expected to exist.

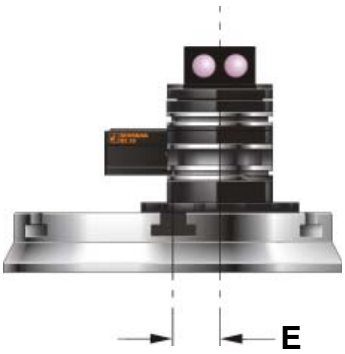

Axes of rotation parallel but not coincident

Optics translate during rotation.

No measurement error.

To avoid signal loss, ensure E < 0.5 mm.

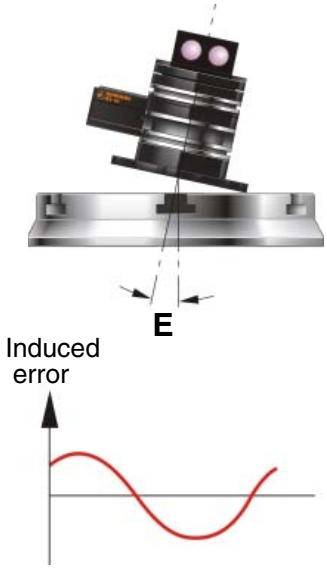

Axes of rotation coincident but not parallel

Sinusoidal component measurement error induced into the captured data over 360˚ rotation. Size of error dependent on E, and shows one cycle in 360˚.

For induced error to be less than ± 1 arcsecond, ensure E < 0.025˚ or the TIR is < 0.04 mm (100 mm x tan [0.025˚]).

For induced error to be less than ± 10 arcseconds, ensure E < 0.23˚ or the TIR is < 0.4 mm (100 mm x tan [0.23˚]).

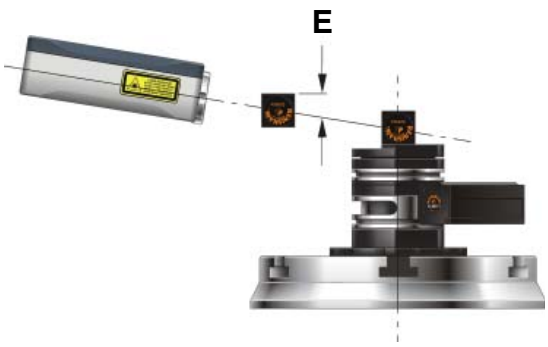

Laser beam not perpendicular to interferometer, axes of rotation coincident

Keep E < 2˚ to prevent 'crosstalk' between the measurement and reference laser beams. Place a slip block across the face of the reflector to align the optics perpendicular to the laser beam. Measurement error eliminated by optical set-up calibration cycle.

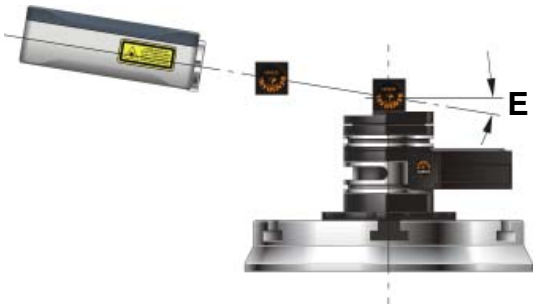

Laser beam not perpendicular to reflector, axes of rotation coincident

Measurement error eliminated by optical set-up calibration cycle.

No danger of beam obstruct fault. E < 5˚.

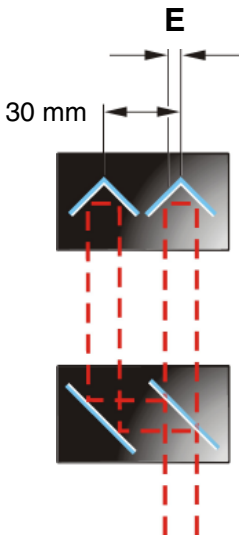

Reflector separation not exactly 30 mm

Caused by thermal expansion and manufacturing tolerances. No danger of beam obstruct. Error eliminated by optical set-up calibration cycle.

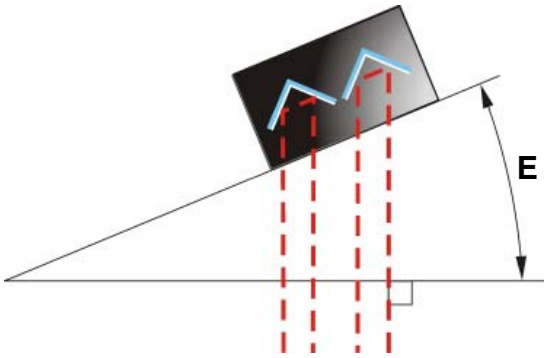

Reflector not perpendicular to laser beam when laser is datumed at start of optical set-up calibration cycle

Limited danger of beam obstruct (only if E ≥ 5˚). Error eliminated by optical set-up calibration cycle. To avoid signal strength loss, ensure E < 2˚. Place a slip block across the face of the reflector to align the optics perpendicular to the laser beam.

Parallelism of rotating axes

It is relatively easy to achieve the alignment tolerances quoted when calibrating a rotary table where there is a mounting surface which is perpendicular to the axis of rotation. However, special care must be taken when calibrating rotating axes without such mounting surfaces. In this case it is recommended that the TIR of the top surface of the RX 10 is checked (whilst rotating the axis under test) using a dial gauge. This allows alignment to be verified before the test starts.

RENISHAW

1 TRAINING COURSE FEEDBACK QUESTIONNAIRE

Part 1

1.1 NAME	**1.1.1 Company**
Job Title	
1.1.2 Course date	

Part 2
Course in General:

Please tick one box	**Exceeded expectations**	**Met expectations**	**Below expectations**
Did the course meet your expectations:	☐	☐	☐
Please rate the practical content:	☐	☐	☐
Please rate the technical content:	☐	☐	☐
Please rate the course overall:	☐	☐	☐
1.1.3 Course Material:			
Please rate the introduction:	☐	☐	☐
Please rate the written course material:	☐	☐	☐
Please rate the course material overall:	☐	☐	☐

1.1.4 What aspects were of most value to you ?

What aspects did you find least useful ?

Did the training meet your objectives ?

Comments and suggestions for improvement:

Renishaw plc
New Mills, Wotton-under-Edge,
Gloucestershire, GL12 8JR
United Kingdom

T +44 (0)1453 524524
F +44 (0)1453 524901
E uk@renishaw.com
www.renishaw.com

RENISHAW
apply innovation™

For worldwide contact details, please visit our main website at www.renishaw.com/contact

H-2000-1098-01