RF Magnetron Sputtering system

Make: Anelva Sputtering Unit Model SPF-332H

Centre for Excellence in Nano-Electronics
Indian Institute of Science, Bangalore-12.

Date of creation: 3/01/2010

Sabiha Sultana (seher.sabz@gmail.com)

Anelva RF Magnetron Sputtering system

Introduction

Sputter deposition is a physical vapor deposition process for depositing thin films, sputtering means ejecting material from a target and depositing it on a substrate such as a silicon wafer. The target is the source material. Substrates are placed in a vacuum chamber and are pumped down to a prescribed process pressure. Sputtering starts when a negative charge is applied to the target material causing a plasma or glow discharge. Positive charged gas ions generated in the plasma region are attracted to the negatively biased target plate at a very high speed. This collision creates a momentum transfer and ejects atomic size particles form the target. These particles are deposited as a thin film into the surface of the substrates.

Sputtering is extensively used in the semiconductor industry to deposit thin films of various materials in integrated circuits processing. Thin anti reflection coatings on glass, which are useful for optical applications are also deposited by sputtering. Because of the low substrate temperatures used, sputtering is an ideal method to deposit contact metals for thin- film transistors. This technique is also used to fabricate thin film sensors, photovoltaic thin films (solar cells), metal cantilevers and interconnects etc.

Anelva SPF-322H sputtering system, shown in fig.1 is equipped with three 3-inch diameter planar magnetron cathodes to facilitate multi layers with target shutter and pre-sputtering shutter and with a rotatable substrate holder shown in Fig.2. The substrate can be heated up to 300˚C to improve the film adhesion to the substrate. The ultimate pressure one can get in the Argon gas in the sputtering chamber of this system is $2x10^{-5}$
milli bar.

Magnetron sputtering can be done either in DC or RF modes. DC sputtering is done with conducting materials. If the target is a non conducting material the positive charge will build up on the material and it will stop sputtering. RF sputtering can be done both conducting and non conducting materials. Here, magnets are used to increase the percentage of electrons that take part in ionization of events and thereby increase the probability of electrons striking the Argon atoms, increase the length of the electron path, and hence increase the ionization efficiency significantly. Some other reason

Operation procedure for RF sputtering system

Block Diagram for evacuation system

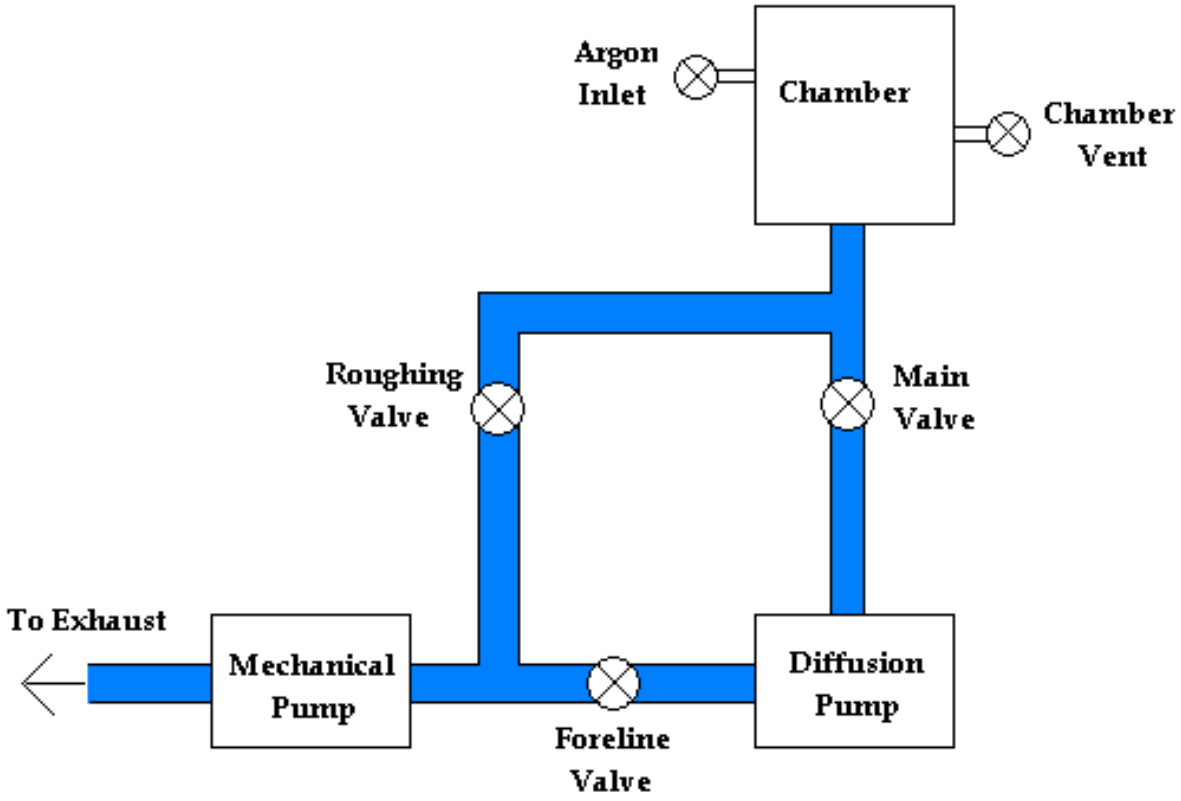

A. Starting up of system/ oil Diffusion Pump (DP):

1. Before entering the clean room make sure to switch ON the sputtering mains in service area. Switch On the chiller, open water inlet valve and check for water circulation.
   The electrical as well as the water supply to the system is given from the service area outside the clean room.

   Note: If the water flow rate towards DP is not enough, buzzer alarms.

2. Before starting up of DP, the status of each valves have to be confirmed as follows;

Main valve……CLOSE
Roughing valve ……CLOSE
Foreline (backing) valve……CLOSE
Chamber vent valve……CLOSE

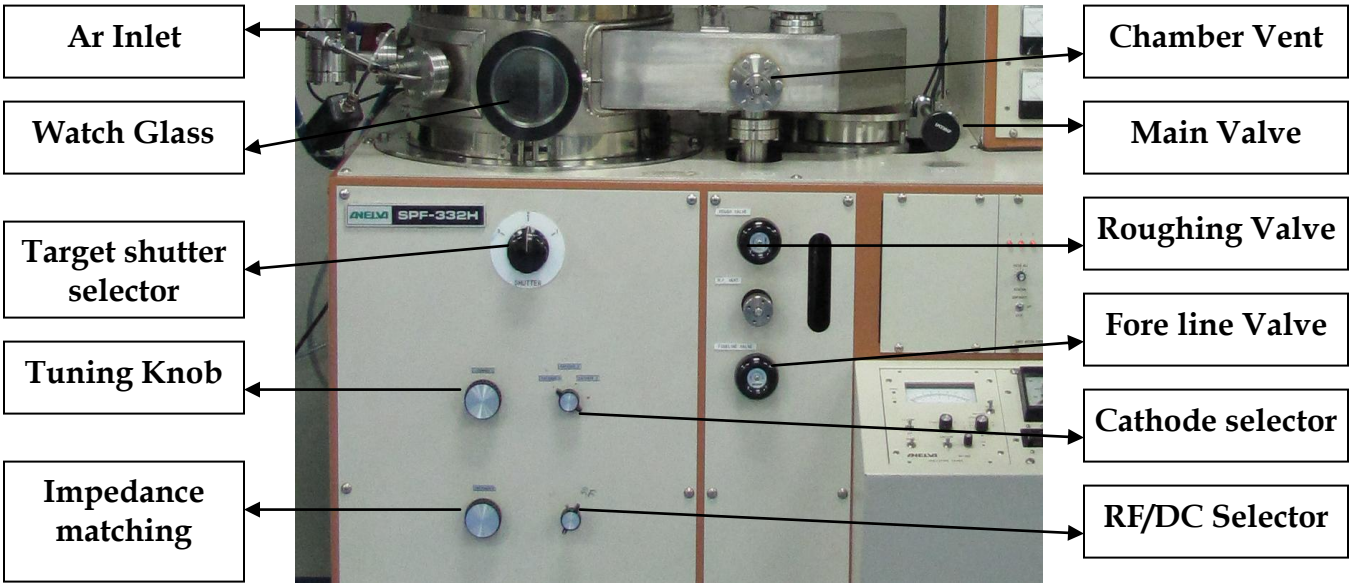

Note: Chamber must be kept under vacuum
Once you confirm that each of valve are kept in above status, then follow the below procedures;

3. Turn ON the main power switch and rotary pump (RP) switch.

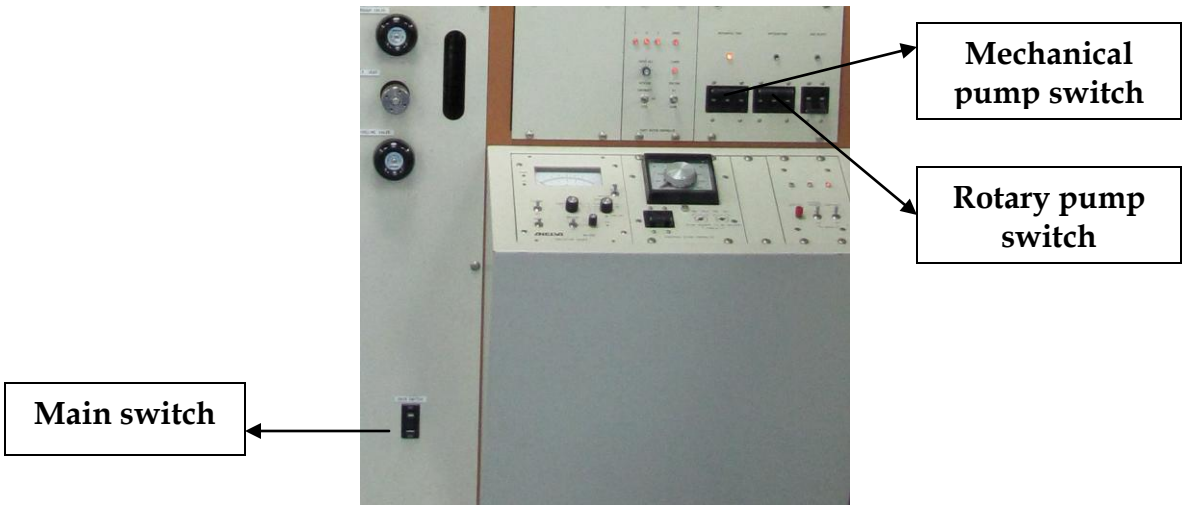

4. After RP working noise becomes small, OPEN foreline valve and turn ON diffusion pump (DP) switch.

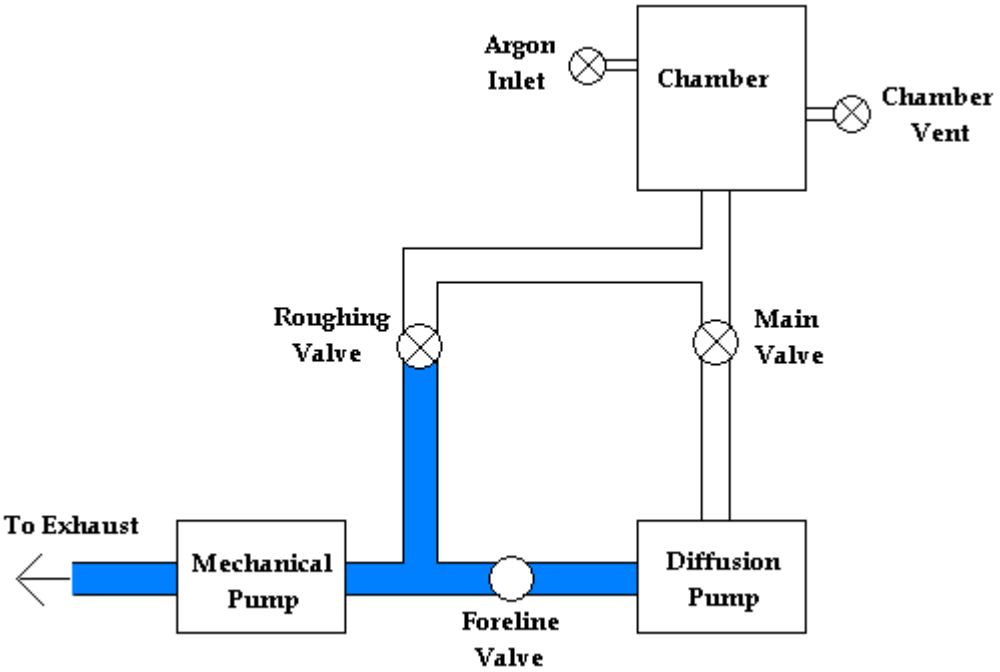

5. After approx.20 min DP will start by itself. During this 20 min time the following sample loading procedure can be done.

B. Sample loading procedure:

1. Release the chamber vent.

2. Manually lift up the chamber and fix the butterfly valve located just behind the chamber.

3. Fix the target material on cathode and the thickness of target material should not exceed over 5mm.

4. Mount the substrate on the substrate holding plate (usually a 2”x2” poly-silicon or alumina plate); which can be found on the sputtering system itself.
   Note: Effective area of thickness /uniformity is 50-60% of the target diameter. (The area of uniform deposition, to a great extent depends on the distance of target and the holder; though it depends on the gas pressure, sputtering power and the target material also).

5. Fix the substrate holding plate onto the substrate holder inside the chamber.

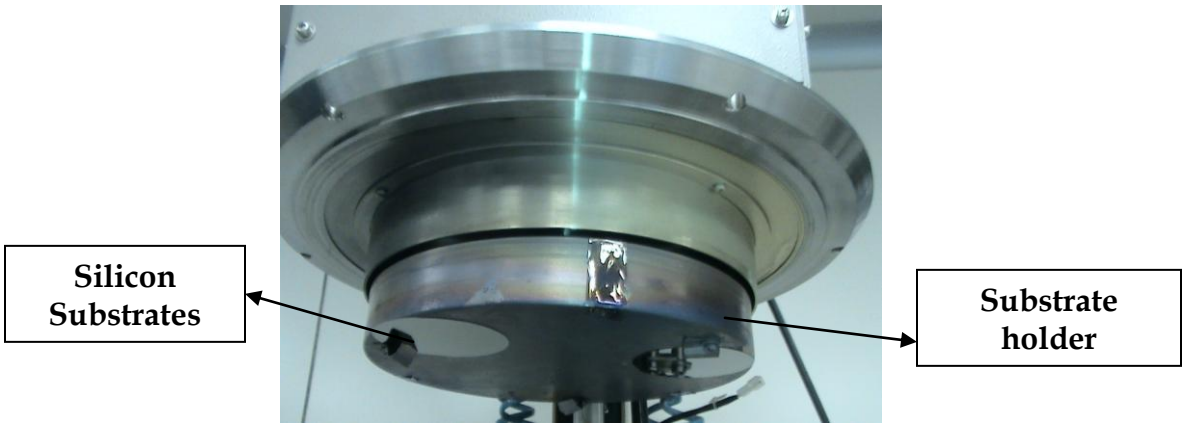

6. Once the samples are loaded check if the target of the material to be deposited is fixed onto the cathode.

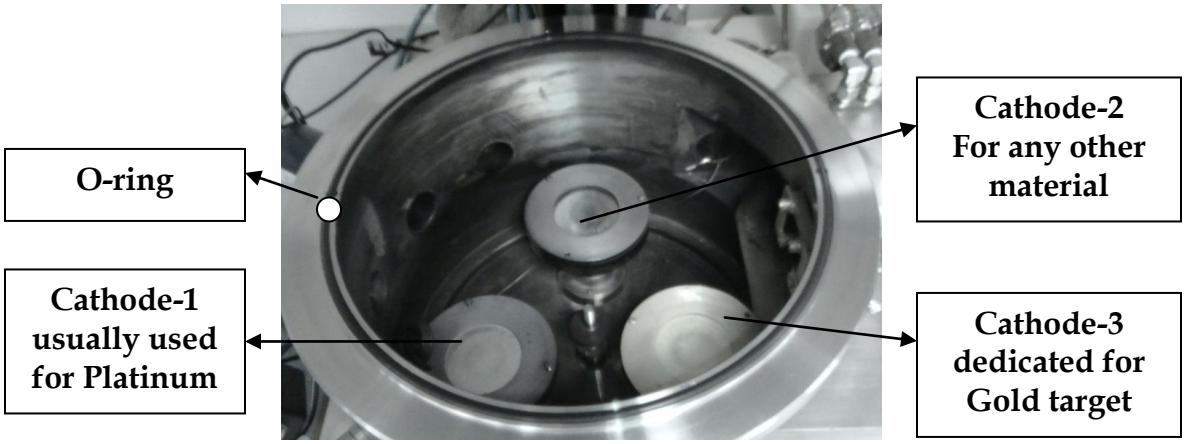

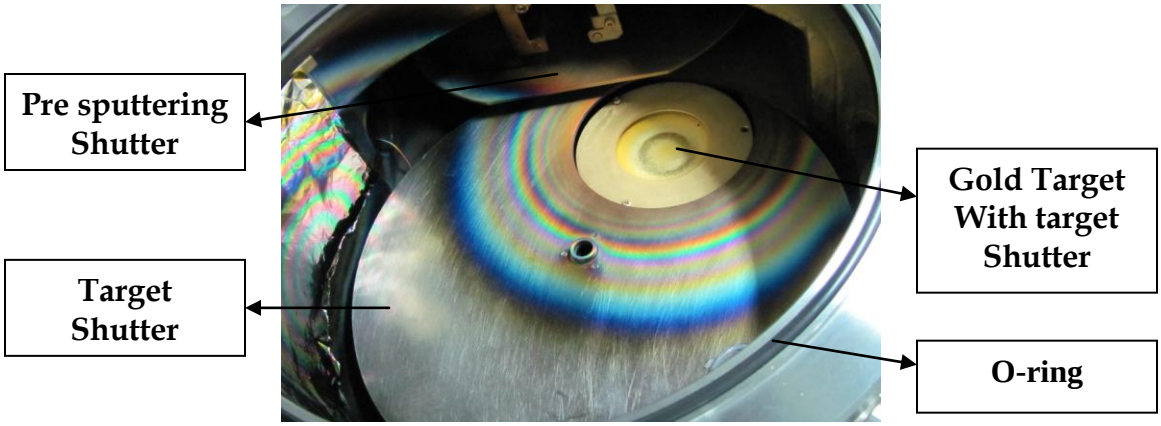

7. Wipe the O-ring using IPA.

Note: Do not use Acetone on O-ring.

8. CLOSE the vacuum chamber.

9. CLOSE chamber vent.

Important: When a High-K di-electric material (Europium oxide, Gadolinium Oxide) has to be sputtered, make sure the system chamber is cleaned thoroughly using IPA (Iso Propyl Alcohol); dedicated holding rings are available for High-K di-electrics, which are to be used for good results. **All this is done to reduce the contamination caused due to the prior metal depositions.**

It is recommended to do all the High-K material sputtering on Fridays as the system is thoroughly cleaned for maintenance on Thursday afternoons.

Accordingly the Indium tin oxide(ITO) or the P-type silicon have to be sputtered on Thursday mornings(ie prior to system cleaning) as they are considered to be contaminants for other material sputtering.

C. Creation of vacuum:

1. OPEN roughing valve and wait till the pressure on Pirani gauge shows 0.05mbar (approx 15min).

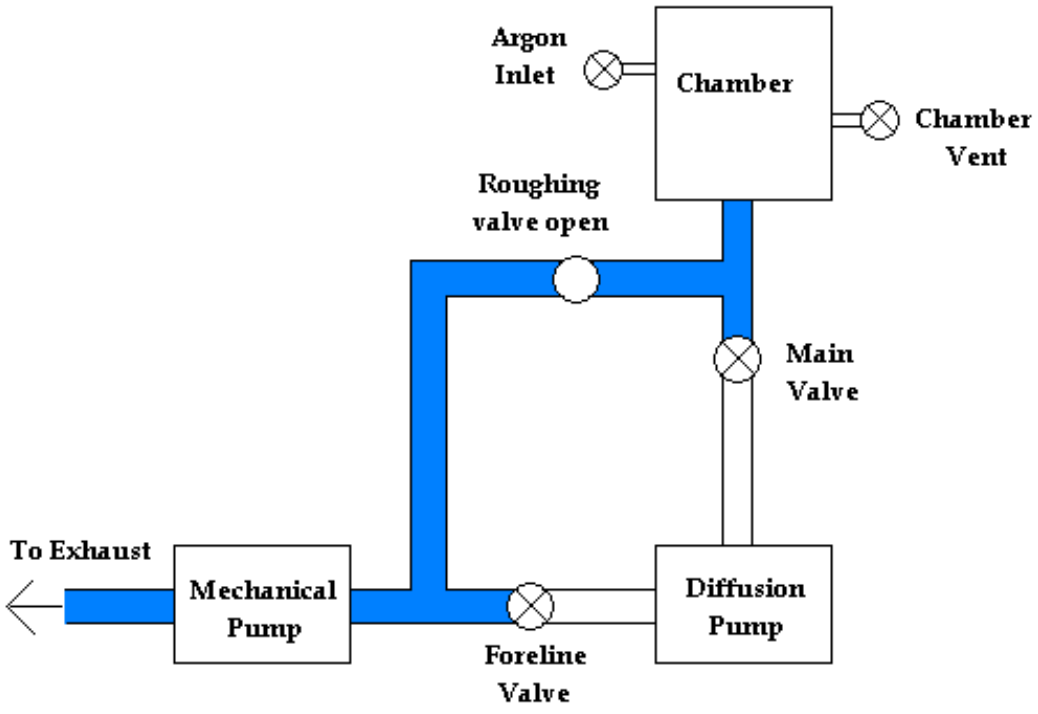

2. CLOSE roughing valve and OPEN foreline valve.

3. Pour liquid nitrogen through LN2 trap.

4. Open main valve.

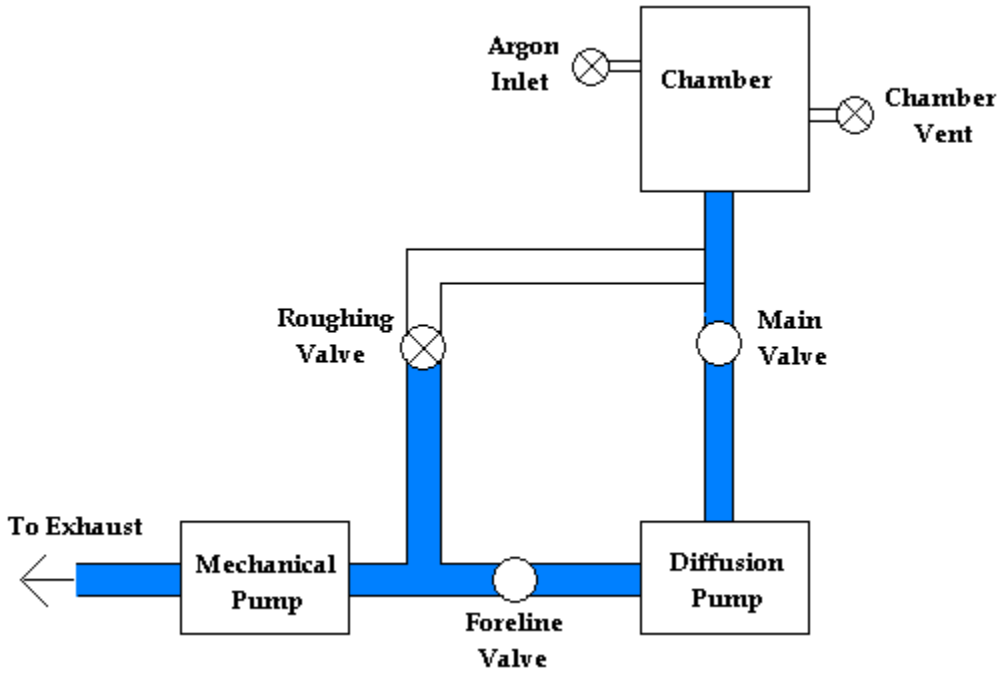

5. Switch ON the Pirani gauge and wait till chamber pressure reaches $2X10^{-5}$ mbar
   Note: This evacuation takes approximately 90min.

D. Setting of deposition pressure:

1. Once the vacuum reaches to $2X10^{-5}$ milli bar; introduce Argon gas (Ar) to the chamber by opening the argon inlet valve gradually. Please be careful not to exceed the pressure over $2X10^{-2}$ mbar to protect DP performance.

2. Close the main valve gradually so as to approach the deposition pressure.

3. Confirm if the pressure is stable.
   Note: The deposition rate for any given material depends on the deposition pressure. Hence for reproducible results use same values.

4. Flush argon for 5 min; ie leave it in the set deposition pressure condition (this is done to flush out the air molecules if any are left after evacuation)

E. Sputtering:

1. Before starting to sputter make sure that the right cathode is selected (as the system has 3 targets), using the cathode selection switch. Same applies to the cathode shutter.

2. Put the RF/DC selection knob towards RF.

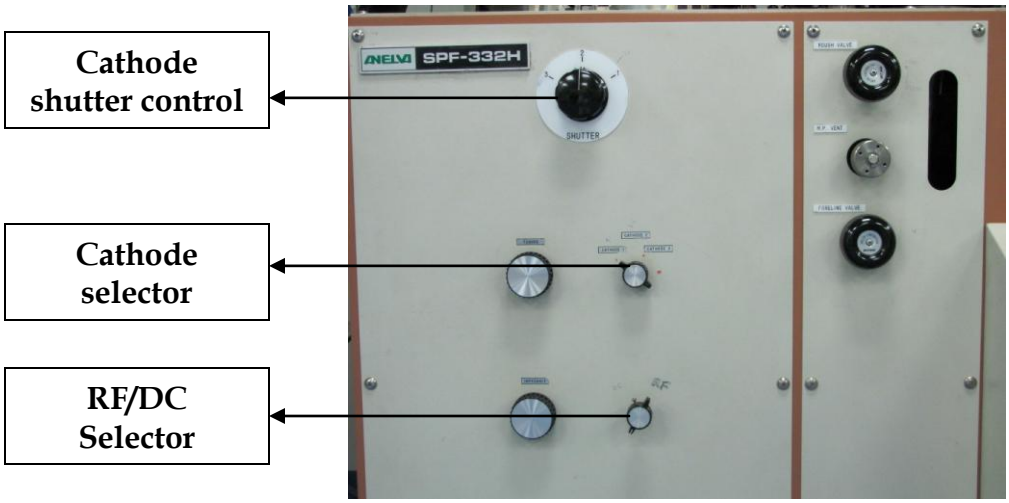

3. Switch ON the RF power supply; apply voltage to the cathode.

4. Set peak voltage of anode current with tuning knob of matching box.

5. After glow discharge occurs, set matching again as RF controller incident power meter to maximum and reflected power to minimum.
   Note: If sputtering is done without a proper matching for a long time, the RF power coaxial cable and connector will burn out and further oscillation tube life will be shortened.

6. Carry out the Pre sputtering on the condition slide shutter is CLOSED to clean the substrate surface, remove oxide layer and discharge conditioning. The Pre sputtering time depends on the sort of material to be deposited and aimed film property.

7. OPEN the slide shutter to perform main sputtering after Pre sputtering.

8. Once finished close the slide shutter.

9. If there are more than 1 sample to be sputtered then move the samples using substrate motion control panel.

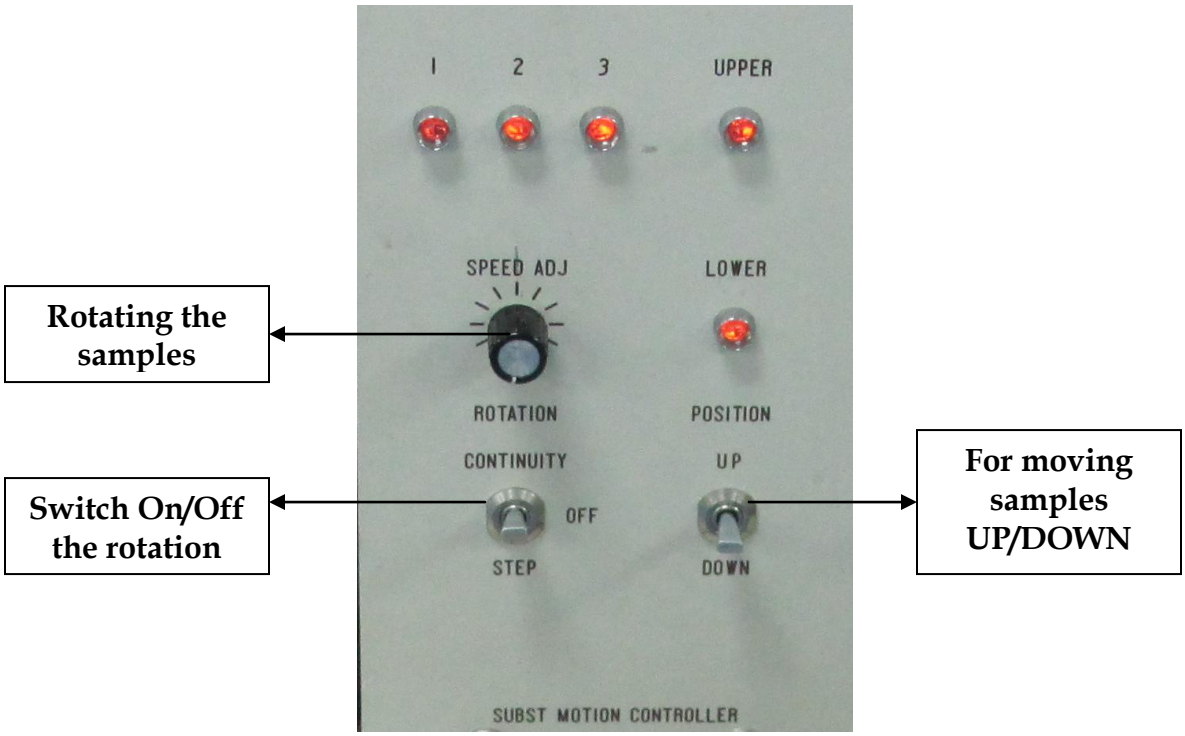

10. Repeat the same process for other samples.

11. For multi-material sputtering; after finishing one material decrease the voltage; change the cathode selector and cathode shutter. Repeat the same process again.

F. Taking out the substrate:

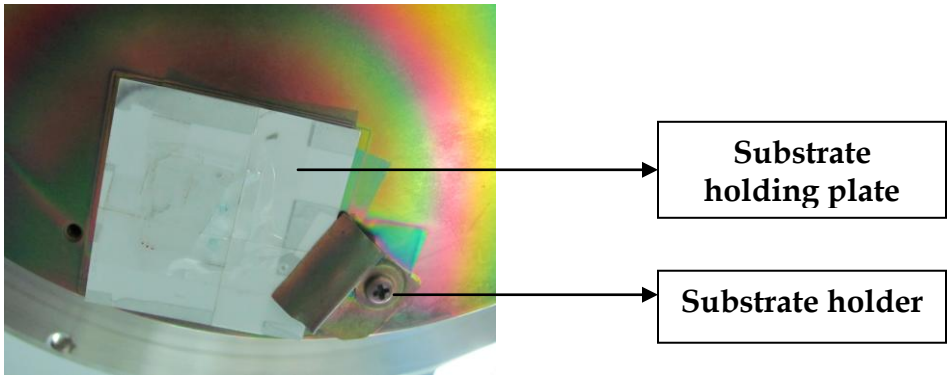

1. Once the main sputtering is done decrease the voltage and turn off the RF power supply.

2. CLOSE main valve.

3. CLOSE the Ar gas inlet.

4. WAIT for about 10min till the substrate temperature becomes low.

5. After 10 min CLOSE the foreline valve and OPEN chamber vent valve to release chamber vacuum.

6. Once the chamber pressure attains to atmospheric pressure, OPEN chamber and take out substrate.

7. CLOSE chamber and CLOSE chamber vent.

G. Shutting down of system:

1. OPEN roughing valve to evacuate chamber and to keep under vacuum for 10min. (this is to prevent accumulation of moisture in chamber).

2. CLOSE roughing valve.

3. TURN OFF DP switch.

4. OPEN fore line valve for 20 min. After 20min CLOSE foreline valve and TURN OFF rotary pump switch.

5. TURN OFF the main power switch.

6. Switch off the Chiller and the mains in service area.

For substrate heating Additional steps to be followed:

1. After the opening of main valve (step C4) Wait for 5min and switch off the substrate water supply.

2. Switch on the Substrate Heater main switch.

3. Set the required temperature using the temperature control knob, and leave it to evacuate for about 90 min.

4. The heater should be ON while sputtering.

5. After sputtering decrease the voltage and switch OFF RF supply.

6. After this decrease the temperature and switch OFF the substrate heater.

7. DO NOT unload the samples immediately.

8. Wait for the substrates to cool down for at least 1 hour.

9. Then switch ON the substrate water supply.

10. Wait for 15 minutes and unload the samples.

Make	Anelva Sputtering Unit Model SPF-332H
Cathodes	Three numbers 3” planar magnetron cathodes
Medium	Argon plasma
Power Source	Direct current for conductive materials, radio frequency for insulators.
Ultimate Pressure in the system	2X10-5 mbar

Magnetron sputtering can be done in either DC or RF modes

DC sputtering:

- DC sputtering is done with conducting materials.
- If target is non-conducting material, the positive charge will built up on target material and stops sputtering

RF sputtering:

- Both conducting and non-conducting materials can be sputtered.
- Higher sputter rate at lower pressure.

Advantages of vacuum deposition:

- Reducing the particle density so that the mean free path for collision is long.
- Reducing the contaminants
- Low pressure plasma environment

ADVANTAGES OF MAGNETRON SPUTTERING

- Here magnets are used to increase the percentage of electrons that take part in ionization events, increase probability of electrons striking Argon, increase electron path length, so the ionization efficiency is increased significantly.
- Other reasons to use magnets:
  - Lower voltage needed to strike plasma.
  - Controls uniformity.
  - Reduce wafer heating from electron bombardment.
  - Increased deposition rate

Operating parameters:

- Argon pressure
- Sputter voltage
- Substrate temperature
- Substrate to target distance
- Deposition time

Comparision of Thermal Evaporation and Sputtering:

Evaporation	Sputtering
Low energy atoms	High energy atoms
High vacuum path	Low vacuum path
Few collision	Many collision
Larger grain size	Smaller grain size
Poorer adhesion	Better adhesion

Pirani Guage:

Make: Lektralab Equipment Co. Pirani Guage A 6 STM

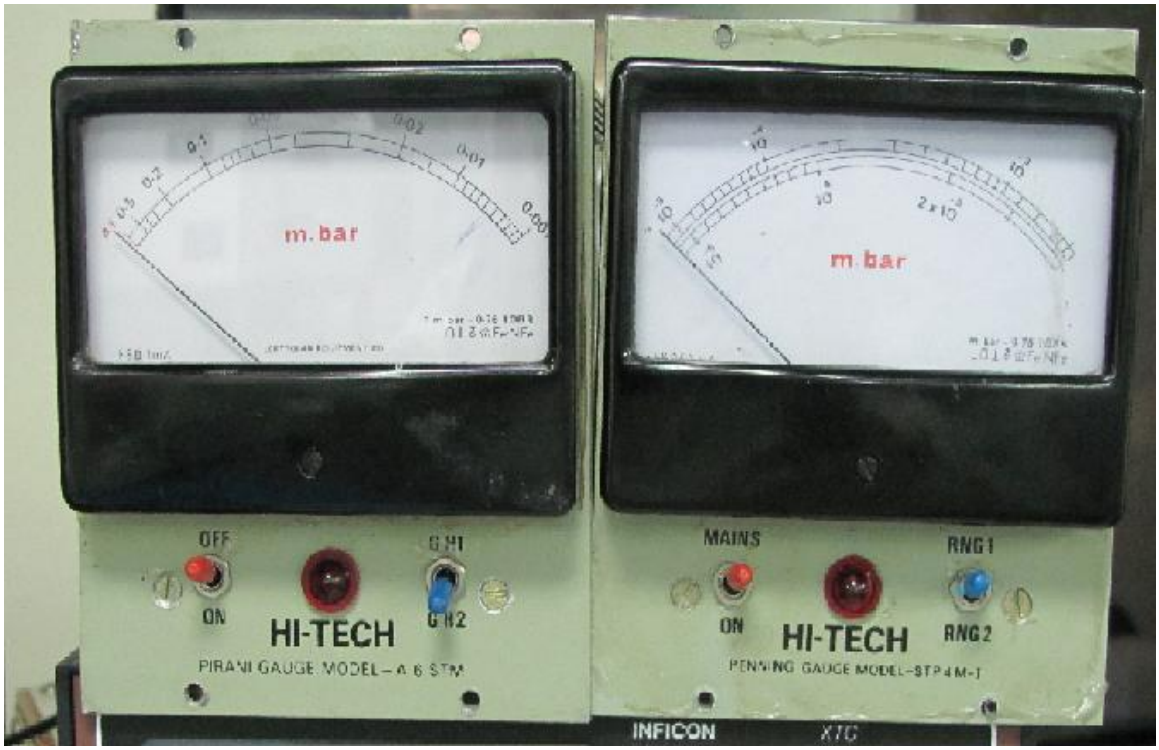

Change of pressure in vacuum systems brings about a rise or fall in number of gas molecules present and hence a rise (or) fall in the thermal conductivity of the gas. Thus the heat loss of constant voltage electrically heated filament in the system varies with the pressure.

The pirani gauge head filament has high temperature co-efficient of resistance. So a slight change in system pressure brings about useful change in filament resistance resulting in an out of balance voltage which can be read as a pressure on meter. The pirani gauge head indicates the total pressure of combined gases and other vapors in the system on the heated wire, which can loss heat to both gas and vapor molecules. The change in resistance due to temperature build-up, of a coil filament, which is supplied with constant voltage placed in Wheatstone bridge configuration, consequent to the pressure and thermal conductivity which is directly read by the gauge in terms of milli bar.

Penning gauge:

Make: Make: Lektralab Equipment Co. Penning Guage- STP 4M I

This is a cold cathode ionization Gauge consisting of two electrodes anode and cathode. A potential difference of about 2.2 KV is applied between anode and cathode through current limiting resistors. A magnetic field is introduced at right angles to the plane of the electrodes by a permanent magnet having nearly 800 gauss magnetic field which will increase the ionization current.

The electrons emitted from the cathode (gauge head body) of the gauge head are deflected by means of magnetic field applied at right angles to the plane of the electrodes and are made to take helical path before reaching the anode loop. Thus following very long path, the chance of collision with gas molecule is high even at low pressures. The secondary electrons produced by ionization themselves perform similar oscillations and the rate of ionization increases rapidly. Eventually, the electrons are captured by the anode and equilibrium is reached when the number of electrons produced per second by ionization is the sum of positive ion current to the cathode and the electron current to the anode and is used to measure the pressure of the gas.

Mechanical pump:

Make: ALCATEL 2012A

A Positive Displacement Pump has an expanding cavity on the suction side of the pump and a decreasing cavity on the discharge side. Liquid is allowed to flow into the pump as the cavity on the suction side expands and the liquid is forced out of the discharge as the cavity collapses. This principle applies to all types of Positive Displacement Pumps whether the pump is a rotary lobe, gear within a gear, piston, diaphragm, screw, progressing cavity, etc.

http://www.pumpworld.com/positive_displacement_pump_basic.htm

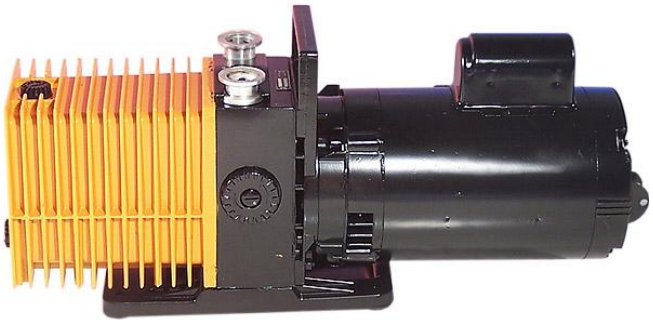

Specifications:

Conventional Series ALCATEL Rotary Vane	2012A
Pump Speed (CFM)	11
Inlet Flange	KF25
Outlet Flange	KF25
Ultimate Pressure UPP UTP	1.5
Rotation Speed (RPM)	1800
Oil Capacity (liters)	0.8
Oil Type Hydrocarbon	A119
Oil Type PFPE	
Weight (LBS.)	58.3
Length (in)	19.5
Width (in)	5.5
Height (in)	6.73
Common Motor Phase	1
Common Motor Voltage	115/220
Water Vapor Capacity	100
Water Vapor Pressure	11

Diffusion Pump:

The diffusion pump is used to produce and maintain low pressures in the electron column, spectrometers, and sample chamber. An oil diffusion pump requires a forevacuum of about 50 millitorr (5 to 10 Pa) to operate. Therefore, it is isolated from the column and sample chamber by a "gate" valve until the mechanical pump has produced a sufficiently good vacuum in the microprobe. Diffusion pumps are so named because rather than actively "pull" air molecules out of a volume, they wait for the molecules to diffuse into the active part of the pump where they are then trapped and removed.

A diffusion pump operates by boiling oil at the base of the pump that rises as a hot vapor. As it rises, it is directed into a funnel-shaped set of baffles (known as a chimney stack.) and jetted as a supersonic vapor towards the sides, which are kept cool by liquid nitrogen that surrounds the upper part of the pump. Air molecules that diffuse into this portion of the pump collide with the vapor molecules and are trapped. The oil vapor cools and condenses, dragging air molecules down as it sinks to the bottom of the pump. At the bottom, the heater reboils the oil, releasing the air molecules, which are

pumped away by the mechanical pump. The diffusion pump produces a working pressure in the sample chamber of about 1 x 10-5 Torr. There is a LN2-cooled baffle located above the pump to prevent oil vapor from entering the chamber.

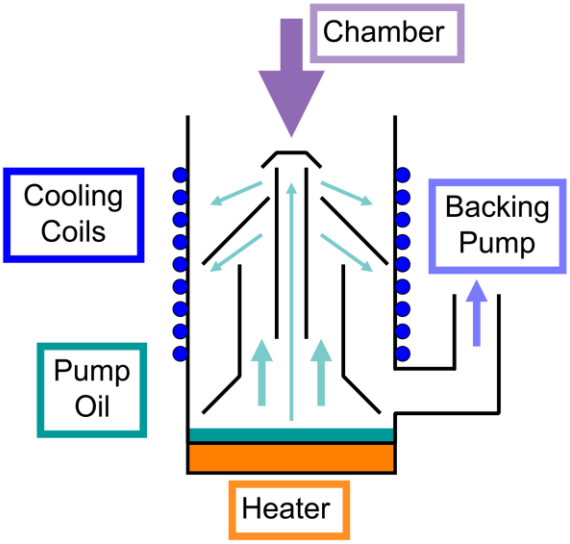

Specifications:

Pumping speed	**600l/sec**
Ultimate pressure	**$1.2x10^{-8}$ mbar**
Operating pressure range	**0.1-0.001 mbar**
Critical fore pressure	**0.05 mbar**
Maximum pumping rate	**0.8 Torr l/sec**
Oil back streaming rate	**$5.0x10^{-4}$ mg/cm^2 min**
Supply voltage and power requirement	**200V 600W**
Startup time	**15 min**
Shut down time	**10 min**
Oil charge	**105cc**
Cooling water flow rate	**0.5 l/min (16°C-29°C)**
Fore line pump	**150 l/min**

Gold sputtering

Deposition time	Distance b/w target & substrate	Voltage in KV	Thickness of film
15sec	7cm	1.5	Around 10nm
30sec	7cm	1.5	18nm
1min	7cm	1.5	25-27nm
3min	7cm	1.5	70-80nm

Platinum sputtering

Deposition time	Distance b/w target & substrate	Voltage in KV	Thickness of film
5min	5.2cm	1	20-25nm
10min	5.2cm	1	50nm
5min	5.2cm	1.5	125nm
10 min	5.2cm	1.5	250-255nm

Cr sputtering

Deposition time	Distance b/w target & substrate	Voltage in KV	Thickness of film
1min	7cm	2.5	60nm
2min	7cm	2.5	120nm

Erbium oxide sputtering

Deposition time	Distance b/w target & substrate	Voltage in KV	Thickness of film
15min	6cm	1	5nm
30min	6cm	1	10nm
15min	6cm	1.5	10nm

Europium Oxide sputtering

Deposition time	Distance b/w target & substrate	Voltage in KV	Thickness of film
1min	6cm	1.5	1.8-2nm
2min	6cm	1.5	4-4.1nm
15min	6cm	1.5	25nm

Gadolinium oxide sputtering

Deposition time	Distance b/w target & substrate	Voltage in KV	Thickness of film
15min	6cm	1	7nm

Date of creation: 3/01/2010

Sabiha Sultana (seher.sabz@gmail.com)

30min	6cm	1	13nm
15min	6cm	1.5	15nm

Titanium sputtering

Deposition time	Distance b/w target & substrate	Voltage in KV	Thickness of film
1min	7cm	2.5	25nm
2min	7cm	2.5	50nm

Tantalum sputtering

Deposition time	Distance b/w target & substrate	Voltage in KV	Thickness of film
5min	7cm	2	70nm
10min	7cm	2	126nm

Tungsten sputtering

Deposition time	Distance b/w target & substrate	Voltage in KV	Thickness of film
5min	7cm	2	65nm
10min	7cm	2	130nm

Silicon sputtering

Deposition time	Distance b/w target & substrate	Voltage in KV	Thickness of film
5min	7cm	1.5	71nm
10min	7cm	1.5	130nm

P-Type Silicon sputtering

Deposition time	Distance b/w target & substrate	Voltage in KV	Thickness of film
7min	6cm	1.5	100nm
15min	6cm	1.5	220nm

Niobium sputtering

Deposition time	Distance b/w target & substrate	Voltage in KV	Thickness of film
5min	7cm	1.5	90nm
10min	7cm	1.5	171nm